Single-cycle Processor

(Computer Organization: Chapter 4)

Yanyan Shen

Department of Computer Science and Engineering

Levels of Interpretation: Instructions

```
for (i = 0; i < 10; i++)
        printf("go cucs");
```

High Level Language

- C, Java, Python, …
- Loops, control flow, variables

```
main:   addi x2, x0, 10
        addi x1, x0, 0
loop:   slt x3, x1, x2
        …
```

Assembly Language

- No symbols (except labels)
- One operation per statement
- "human readable machine language"

```
00000000101000010000000000010011
00100000000000010000000000010000
00000000001000100001100000101010
```

Machine Language

- Binary-encoded assembly
- Labels become addresses
- **The language of the CPU**

Instruction Set Architecture

ALU, Control, Register File, …

Machine Implementation (Microarchitecture)

Objectives

- How are MIPS instructions executed?
- Understanding the basics of a processor
- Putting it all together
  - Arithmetic Logic Unit (ALU)
  - Register File
  - Memory
    - SRAM: cache
    - DRAM: main memory

The Processor: Datapath & Control

- Our implementation of the MIPS is simplified
  - memory-reference instructions: `lw, sw`
  - arithmetic-logical instructions: `add, sub, and, or, slt`
  - control flow instructions: `beq, j`

- Generic implementation
  - use the program counter (PC) to supply the instruction address and fetch the instruction from memory (and update the PC)
  - decode the instruction (and read registers)
  - execute the instruction

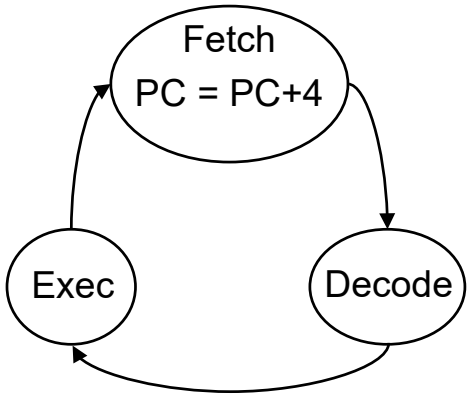

- All instructions (except `j`) use the ALU after reading the registers
  - How memory-reference? arithmetic? control flow?

How to Design a Processor: step-by-step

- 1. Analyze instruction set => datapath requirements
  - the meaning of each instruction is given by the register transfers
  - datapath must include storage element for ISA registers
    - possibly more
  - datapath must support each register transfer
- 2. Select set of datapath components and establish clocking methodology
- 3. Assemble datapath meeting the requirements
- 4. Analyze implementation of each instruction to determine setting of control points that effects the register transfer.
- 5. Assemble the control logic

The MIPS Instruction Formats

- All MIPS instructions are 32 bits long. The three instruction formats:
  - R-type

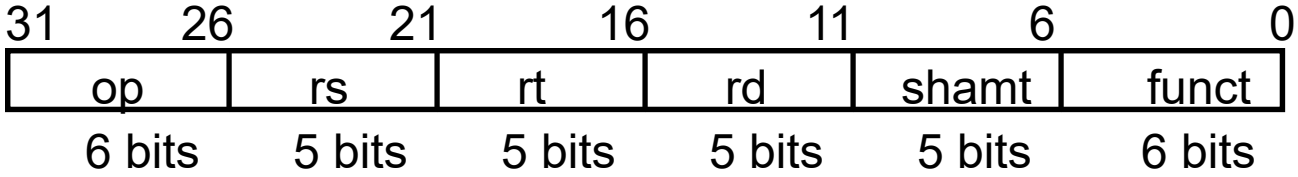

  - I-type

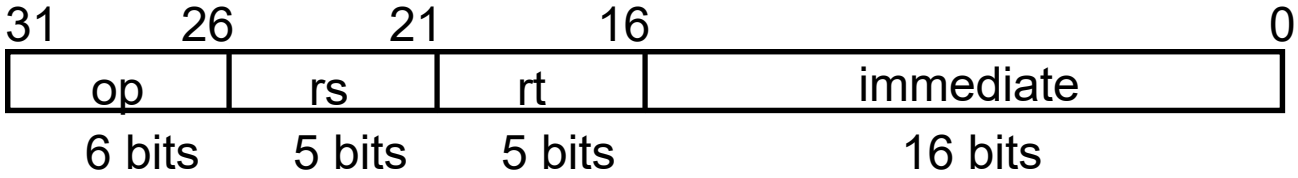

  - J-type

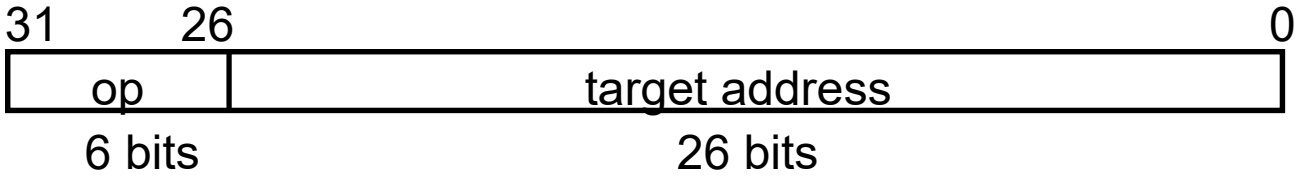

- The different fields are:
  - op: operation of the instruction
  - rs, rt, rd: the source and destination register specifiers
  - shamt: shift amount
  - funct: selects the variant of the operation in the “op” field
  - address / immediate: address offset or immediate value
  - target address: target address of the jump instruction

Focus on a Subset of MIPS Instructions

7 Instructions

- ADD and subtract
  - add rd, rs, rt
  - sub rd, rs, rt
- OR Immediate:
  - ori rt, rs, imm16
- LOAD and STORE
  - lw rt, rs, imm16
  - sw rt, rs, imm16
- BRANCH:
  - beq rs, rt, imm16
- JUMP:
  - j target

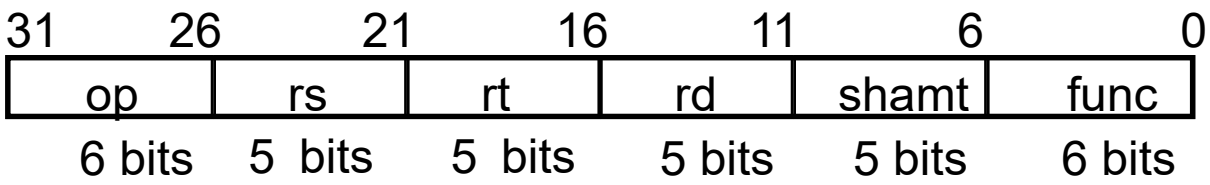

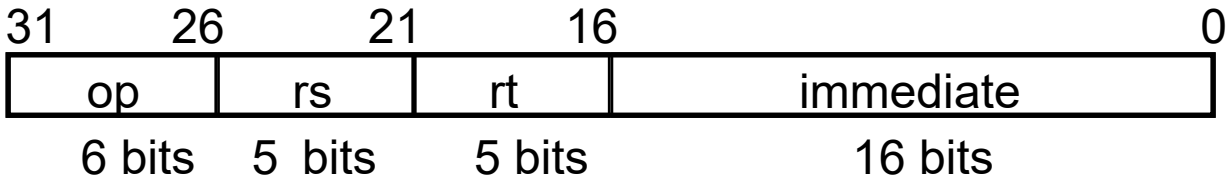

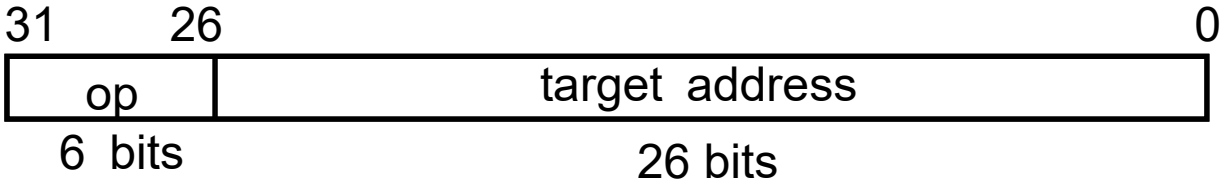

Aside: Logical Register Transfers

- RTL gives the **meaning** of the instructions
- All start by fetching the instruction

op | rs | rt | rd | shamt | funct = MEM[PC]

op | rs | rt | Imm16 = MEM[PC]

inst	Register Transfers	
ADDU	R[rd] <– R[rs] + R[rt];	PC <– PC + 4
SUBU	R[rd] <– R[rs] – R[rt];	PC <– PC + 4
ORI	R[rt] <– R[rs] | zero_ext(Imm16);	PC <– PC + 4
LOAD	R[rt] <– MEM[R[rs] + sign_ext(Imm16)];	PC <– PC + 4
STORE	MEM[R[rs] + sign_ext(Imm16)] <– R[rt];	PC <– PC + 4

BEQ if (R[rs] == R[rt]) then PC <– PC + 4 +sign_ext(Imm16)] || 00
else PC <– PC + 4

Step 1: Requirements of the Instruction Set

- Memory (MEM)
  - Instructions & data
- Registers (R: 32 x 32)
  - Read *rs*
  - Read *rt*
  - Write *rt* or *rd*
- PC
- Extender (sign/zero extend)
- Add/Sub/OR unit for operation on register(s) or extended immediate
- Add 4 (+ maybe extended immediate) to PC

Step 2: Components of the Datapath

- Combinational Elements
- Storage Elements
  - Clocking methodology

Combinational Logic Elements

- Adder

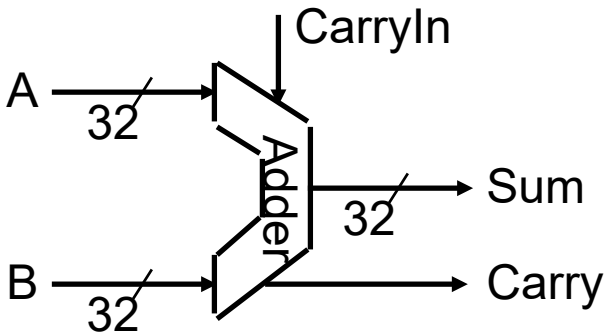

- MUX

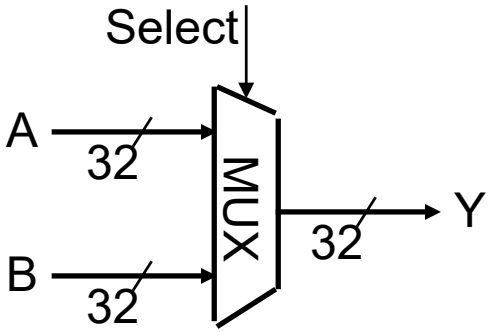

- ALU

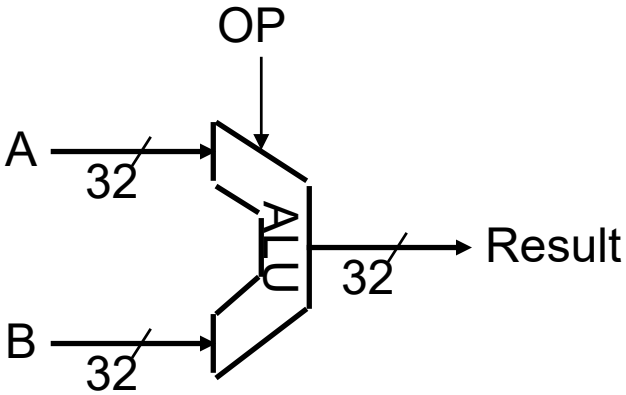

Storage Element: Register File

- Register File consists of 32 registers:
  - Two 32-bit output busses: busA and busB
  - One 32-bit input bus: busW

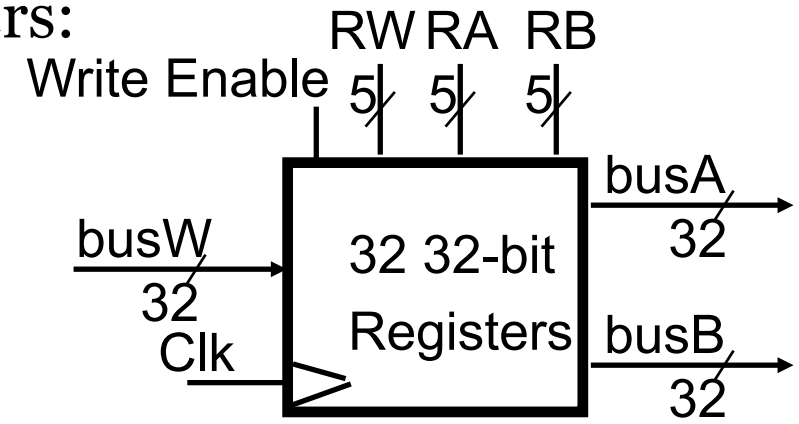

- Register is selected by:
  - RA (number) selects the register to put on busA (data)
  - RB (number) selects the register to put on busB (data)
  - RW (number) selects the register to be written via busW (data) when Write Enable is 1

- Clock input (CLK)
  - The CLK input is a factor ONLY during write operation
  - During read operation, behaves as a combinational logic block:
    - RA or RB valid => busA or busB valid after "access time."

Storage Element: Idealized Memory

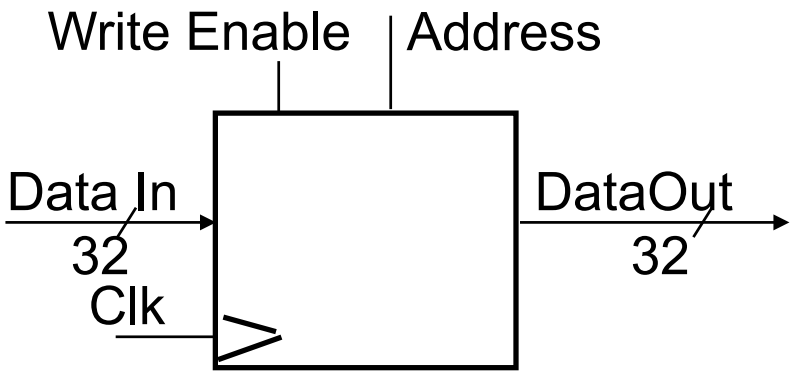

- Memory (idealized)
  - One input bus: Data In
  - One output bus: Data Out
- Memory word is selected by:
  - Address selects the word to put on Data Out
  - Write Enable = 1: address selects the memory word to be written via the Data In bus
- Clock input (CLK)
  - The CLK input is a factor ONLY during write operation
  - During read operation, behaves as a combinational logic block:
    - Address valid => Data Out valid after "access time."

Aside: Clocking Methodologies

- The clocking methodology defines when data in a state element is valid and stable relative to the clock
  - State elements - a memory element such as a register
  - Edge-triggered – all state changes occur on a clock edge
- Typical execution
  - read contents of state elements -> send values through combinational logic -> write results to one or more state elements

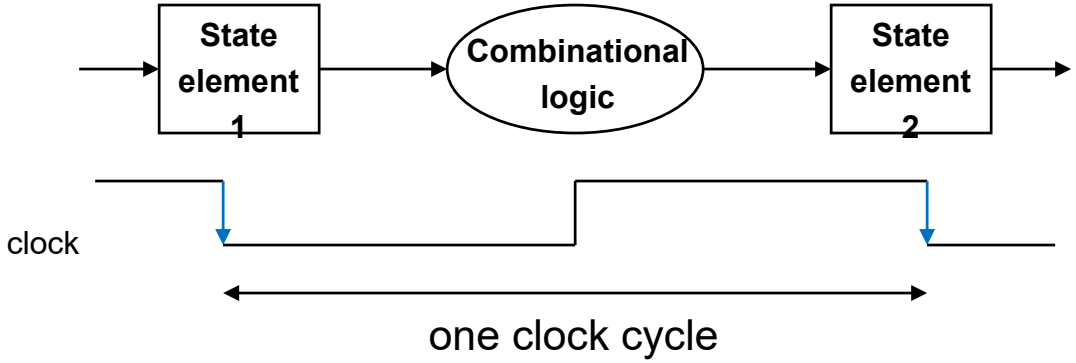

- Assumes state elements are written on every clock cycle; if not, need explicit write control signal

  write occurs only when both the write control is asserted and the clock edge occurs

Aside: Clocking Methodologies

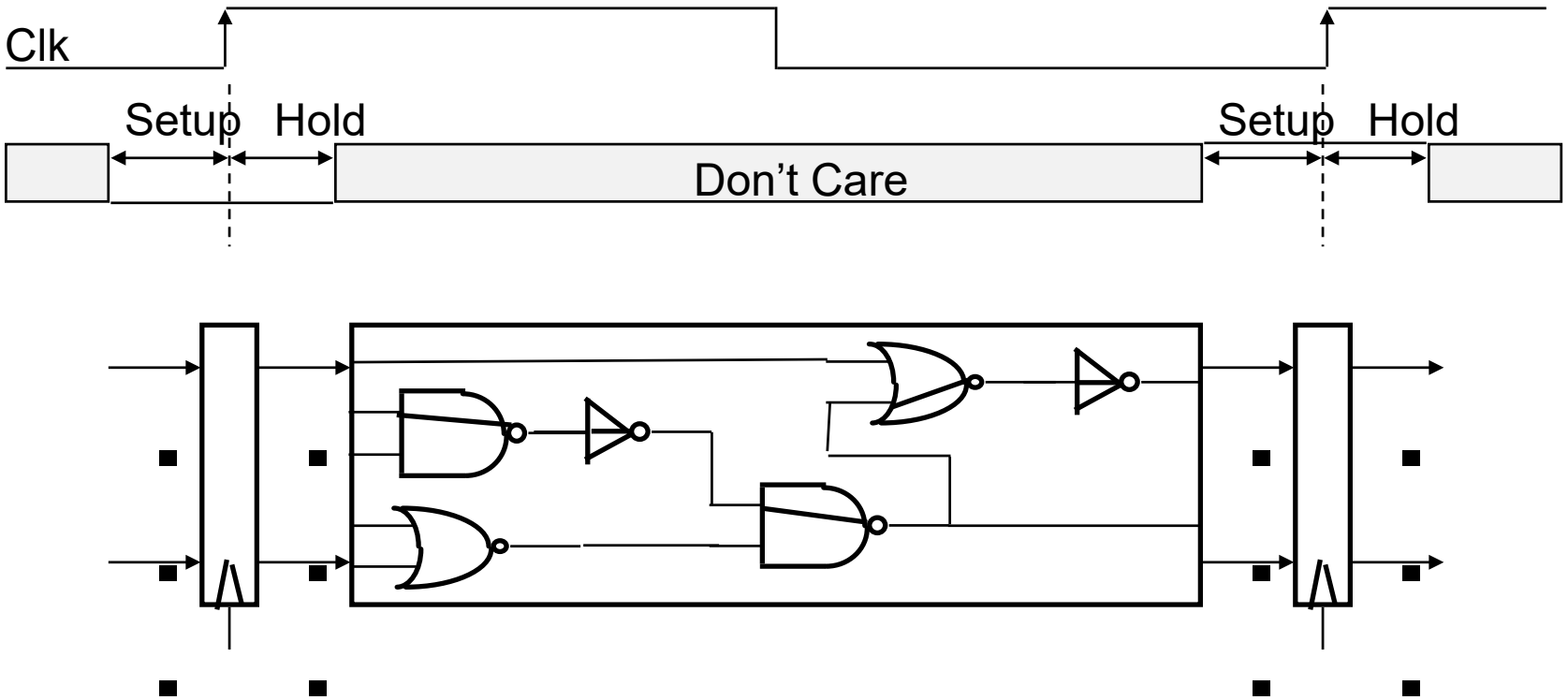

- All storage elements are clocked by the same clock edge
- Cycle Time = CLK-to-Q + Longest Delay Path + Setup + Clock Skew

Step 3: Assemble DataPath meeting our requirements

- Register Transfer Requirements
  $\Rightarrow$ Datapath Assembly
- Instruction Fetch
- Read Operands and Execute Operation

Generic Steps of Datapath

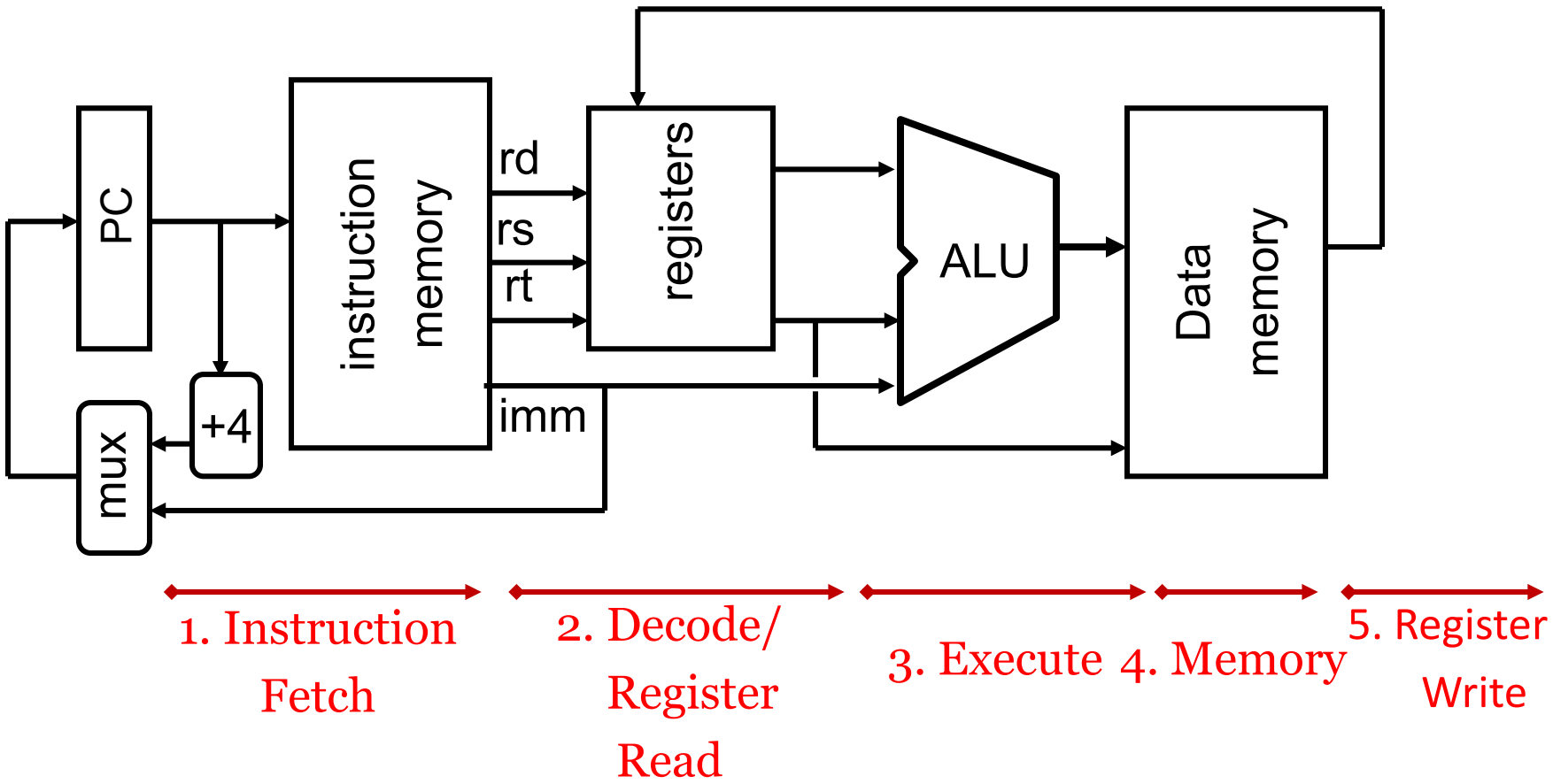

Fetching Instructions

- Fetching instructions involves
  - reading the instruction from the Instruction Memory M[PC]
  - updating the PC value to be the address of the next (sequential) instruction PC ← PC + 4

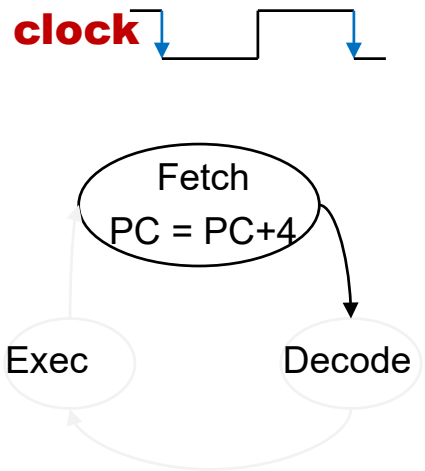

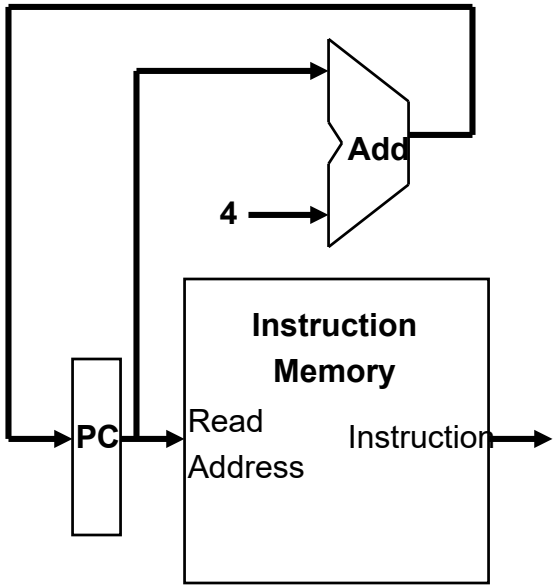

PC is updated every clock cycle, so it does not need an explicit write control signal just a clock signal

Reading from the Instruction Memory is a combinational activity, so it doesn't need an explicit read control signal

Decoding Instructions

- Decoding instructions involves
  - sending the fetched instruction's opcode and function field bits to the control unit

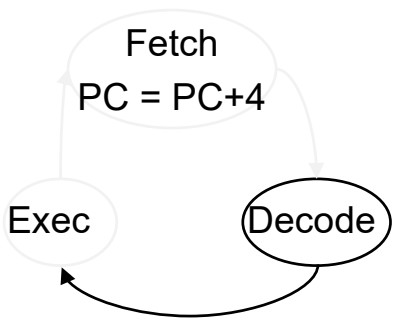

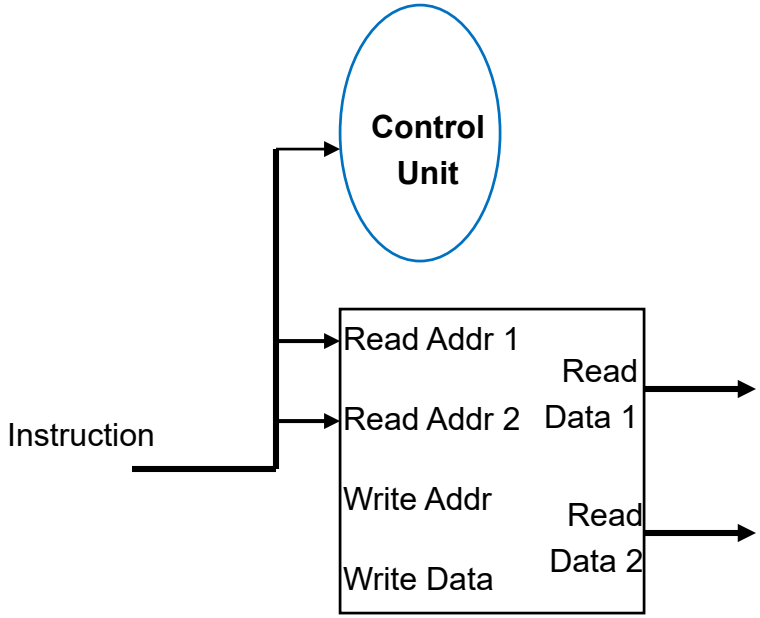

and

reading two values from the Register File

- Register File addresses are contained in the instruction

Executing R-type Instructions

7 Instructions

- ADD and subtract
  - add rd, rs, rt
  - sub rd, rs, rt
- OR Immediate:
  - ori rt, rs, imm16
- LOAD and STORE
  - lw rt, rs, imm16
  - sw rt, rs, imm16
- BRANCH:
  - beq rs, rt, imm16
- JUMP:
  - j target

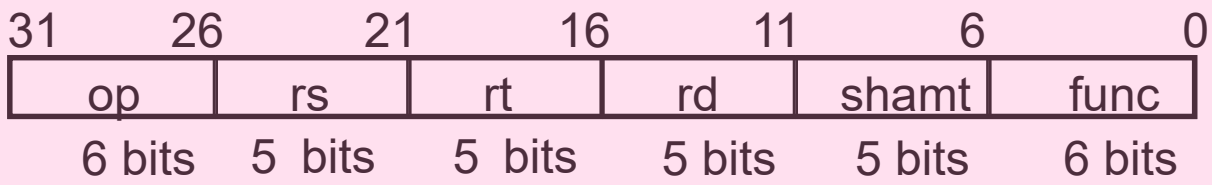

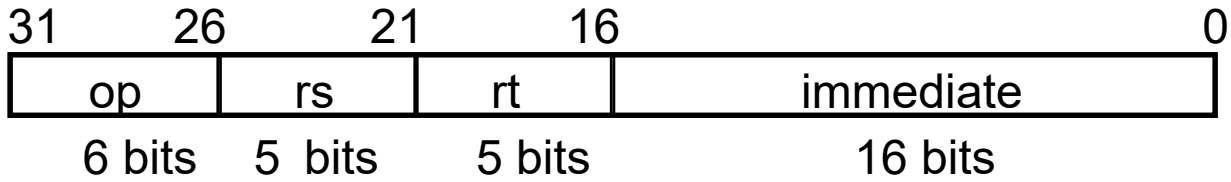

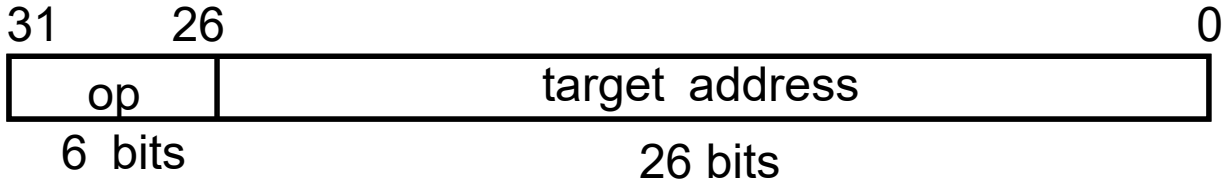

Datapath of RR（R-type）

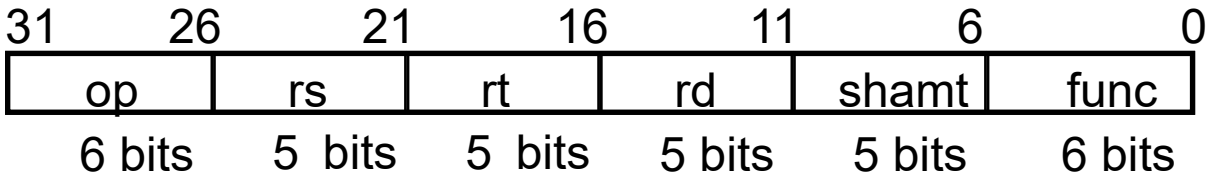

- RTL：R[rd] ← R[rs] op R[rt]　　Example: add　rd, rs, rt

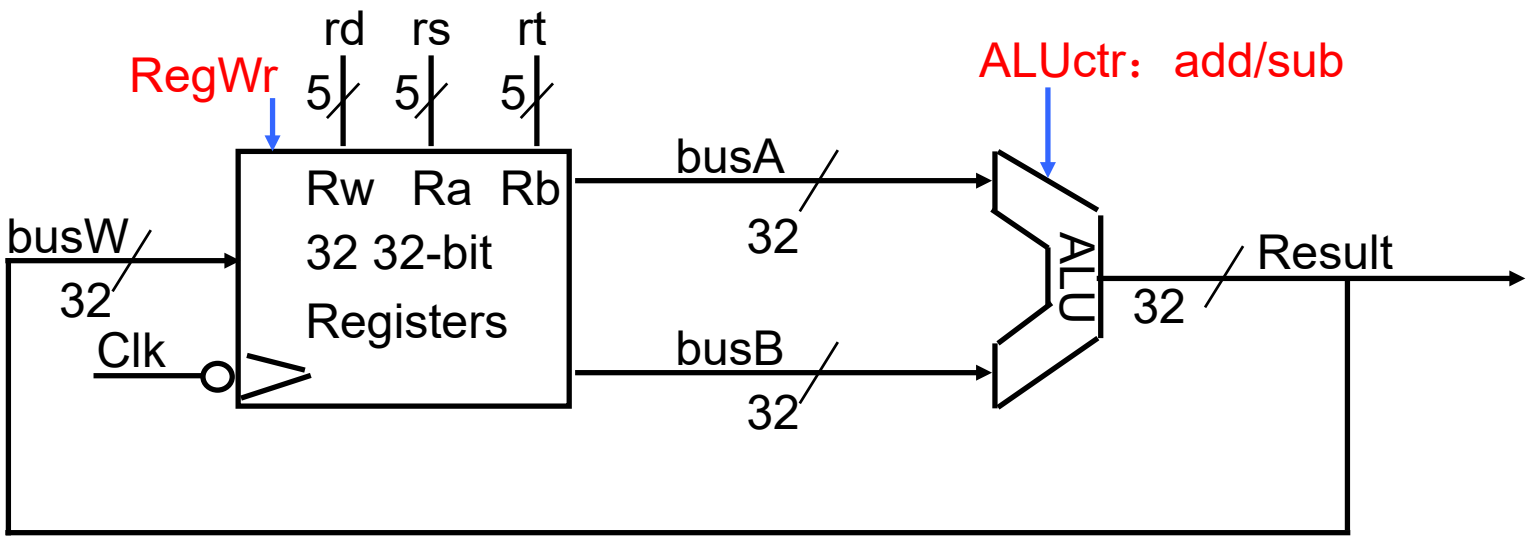

Ra, Rb, Rw correspond to rs, rt, rd

ALUctr,RegWr: control signal

What are controls signals for "add rd, rs, rt" ?

ALUctr=add，RegWr=1

I-type instruction（ori）

- ADD and subtract
  - add rd, rs, rt
  - sub rd, rs, rt
- OR Immediate:
  - ori rt, rs, imm16
- LOAD and STORE
  - lw rt, rs, imm16
  - sw rt, rs, imm16
- BRANCH:
  - beq rs, rt, imm16
- JUMP:
  - j target

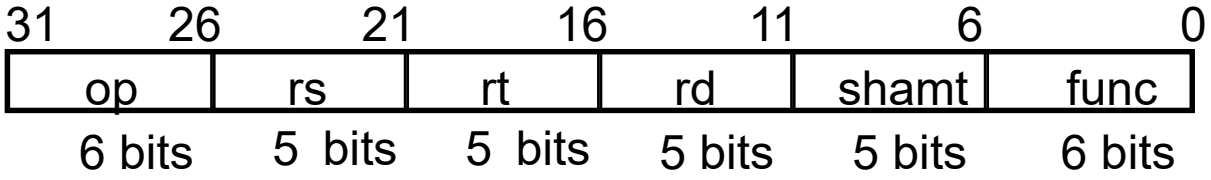

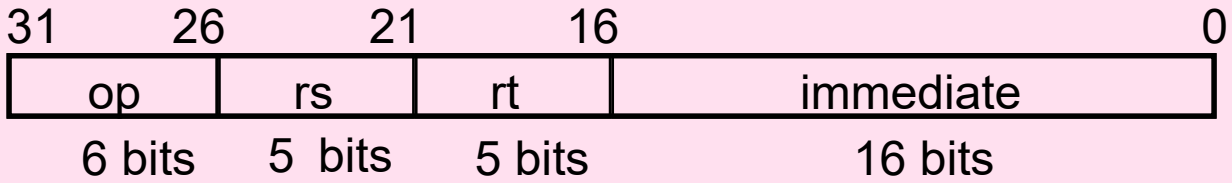

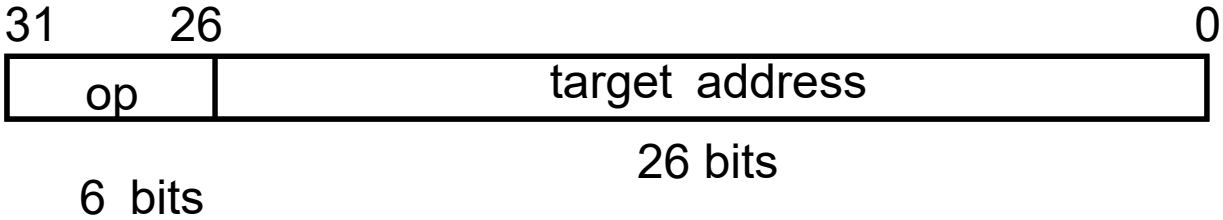

RTL: The OR Immediate Instruction

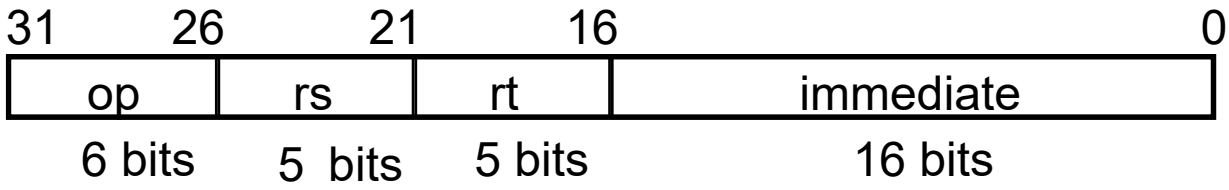

- ori rt, rs, imm16
  - M[PC] Instruction Fetch
  - R[rt] ← R[rs] or ZeroExt(imm16)

    zero extension of 16 bit constant or R[rs]
  - PC ← PC + 4 update PC

Zero extension ZeroExt(imm16)

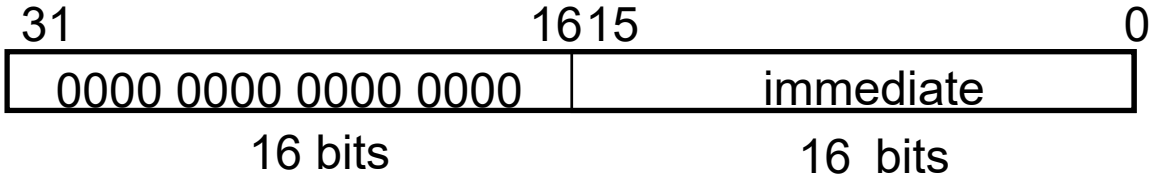

Datapath of Immediate Instruction

- R[rt] ← R[rs] op ZeroExt[imm16]] Example: ori rt, rs, imm16

31–26	25–21	20–16	15–0
op	rs	rt	immediate
6 bits	5 bits	5 bits	16 bits

Write the results of R-Type instruction to Rd

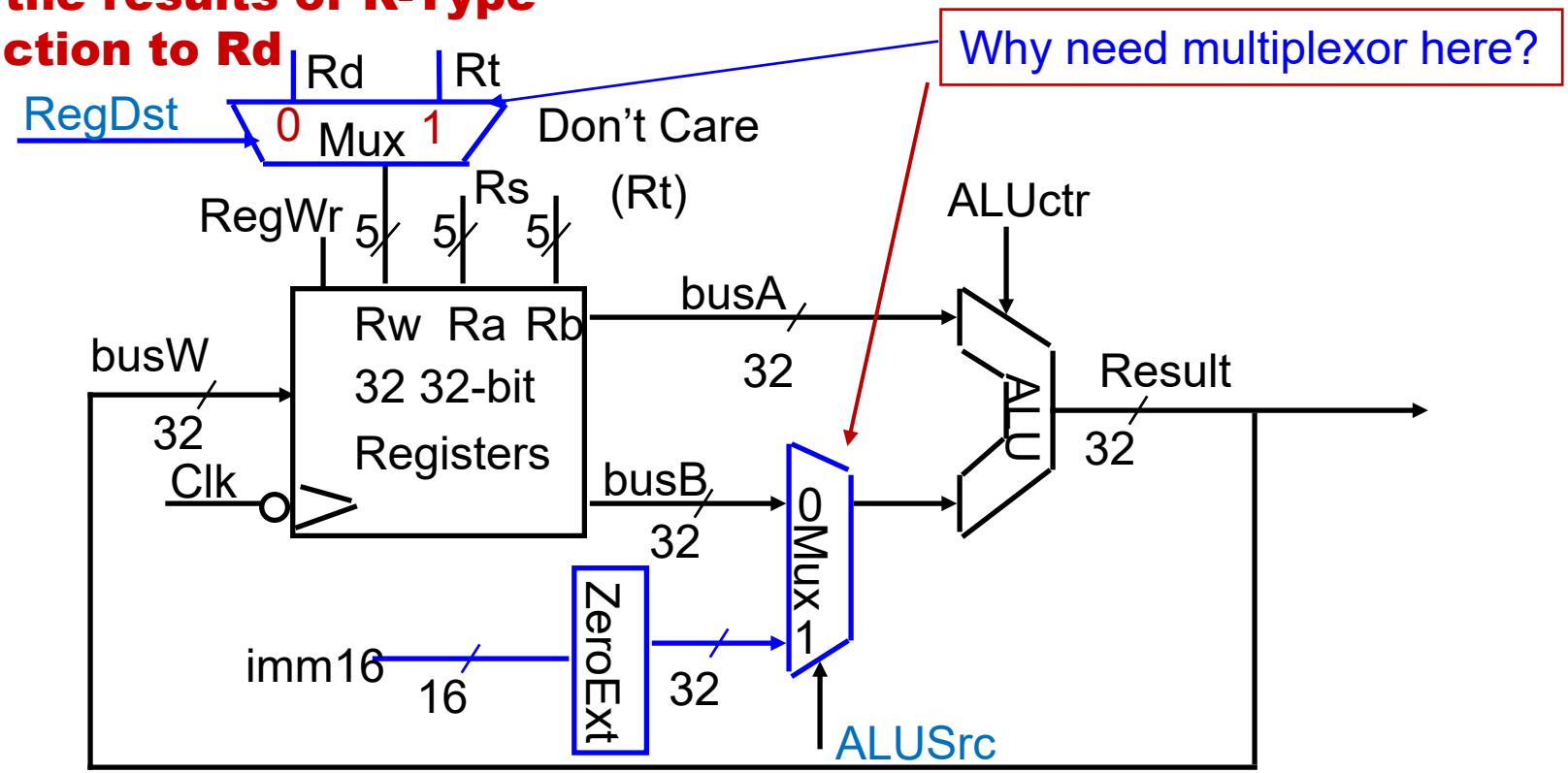

Ori control signals: RegDst=? ; RegWr=? ; ALUctr=? ; ALUSrc=?

Ori control signals: RegDst=1; RegWr=1; ALUctr=or; ALUSrc=1

Datapath for lw (memory access instruction)

- ADD and subtract
  - add rd, rs, rt
  - sub rd, rs, rt
- OR Immediate:
  - ori rt, rs, imm16
- LOAD and STORE
  - lw rt, rs, imm16
  - sw rt, rs, imm16
- BRANCH:
  - beq rs, rt, imm16
- JUMP:
  - j target

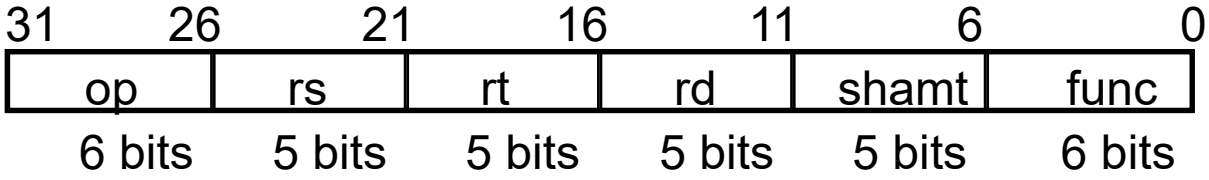

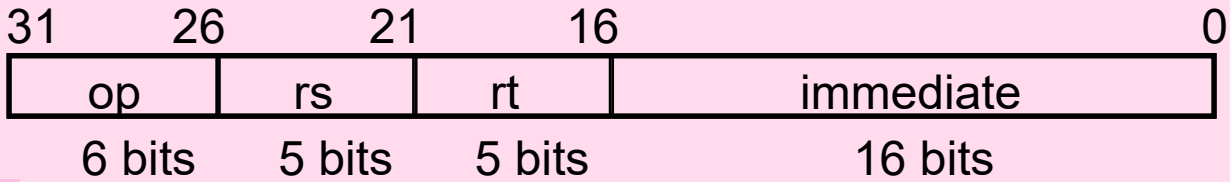

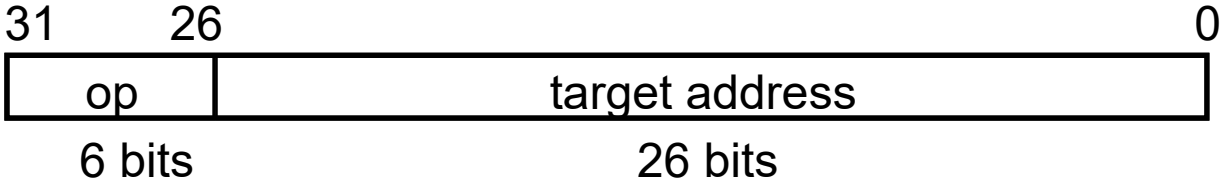

RTL: The Load Instruction

RTL:寄存器传输优先级，一种抽象模型，抽象掉了底层的电路实现。

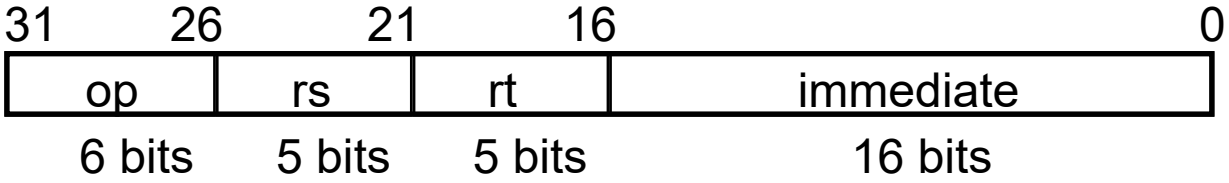

- lw rt, rs, imm16
  - M[PC] Instruction Fetch
  - Addr ← R[rs] + SignExt(imm16) Compute the address
  - R[rt] ← M [Addr] Load Data to rt
  - PC ← PC + 4 Update PC

Why using signed extension rather than zero extension?

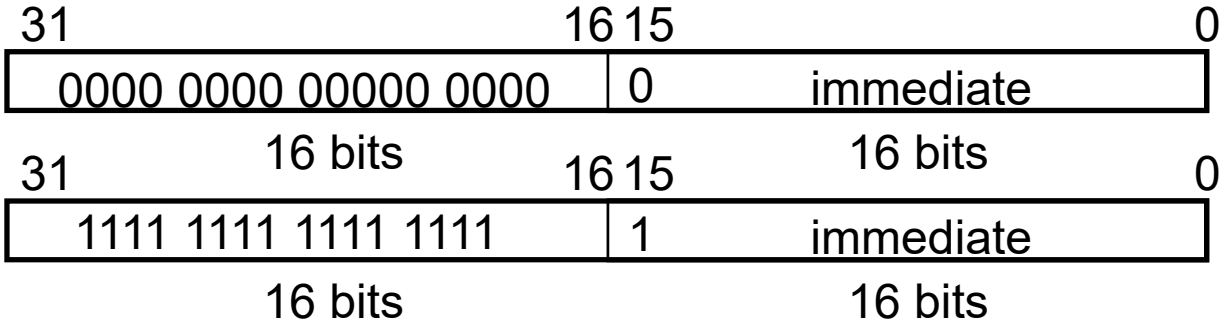

Datapath for Load Instruction

- R[rt] ← M[R[rs] + SignExt[imm16]] Example: lw rt, rs, imm16

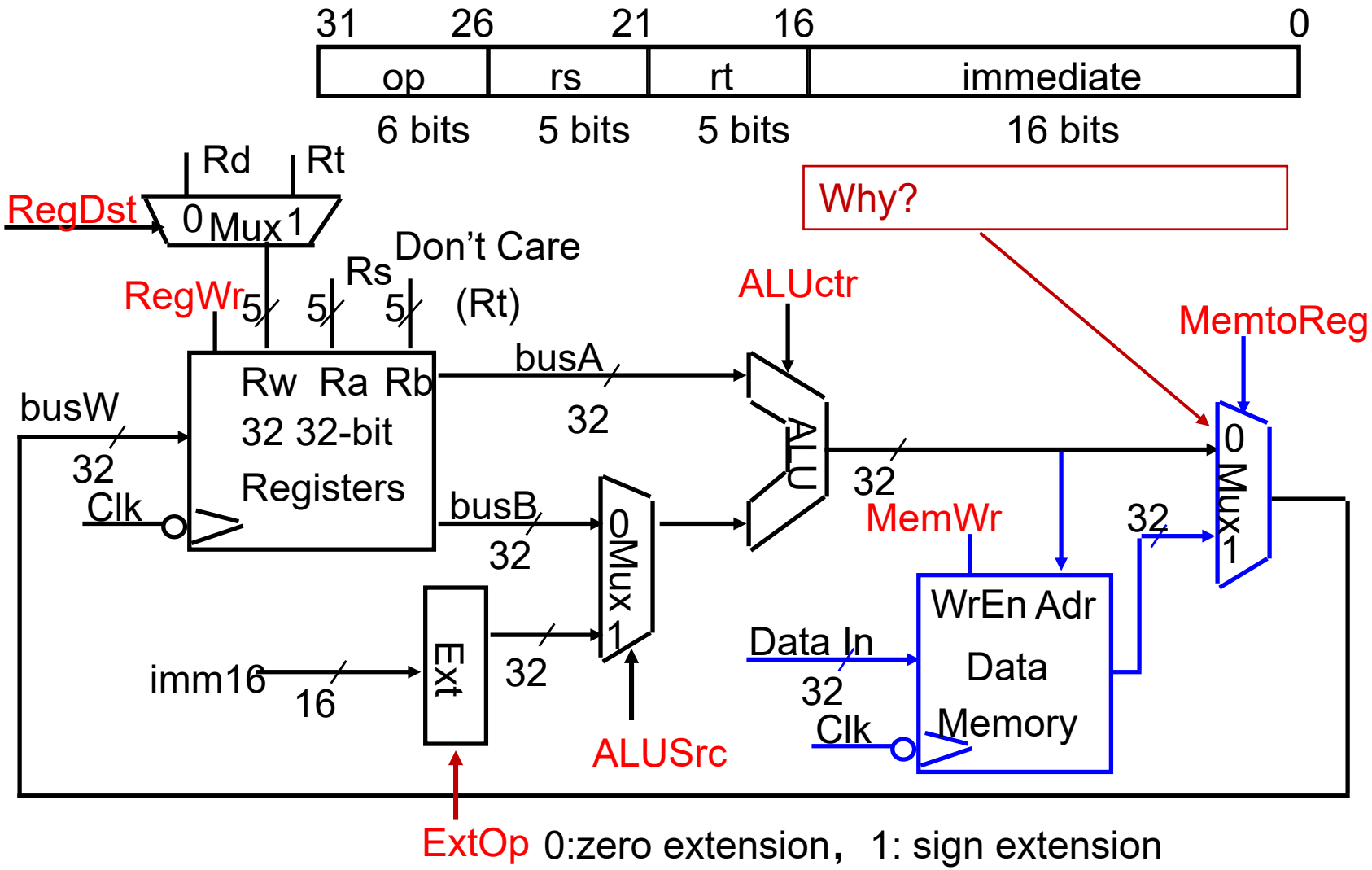

RegDst=1, RegWr=1, ALUctr=add, ExtOp=1, ALUSrc=1, MemWr=0, MemtoReg=1

SW instruction

- ADD and subtract
  - add rd, rs, rt
  - sub rd, rs, rt
- OR Immediate:
  - ori rt, rs, imm16
- LOAD and STORE
  - lw rt, rs, imm16
  - sw rt, rs, imm16
- BRANCH:
  - beq rs, rt, imm16
- JUMP:
  - j target

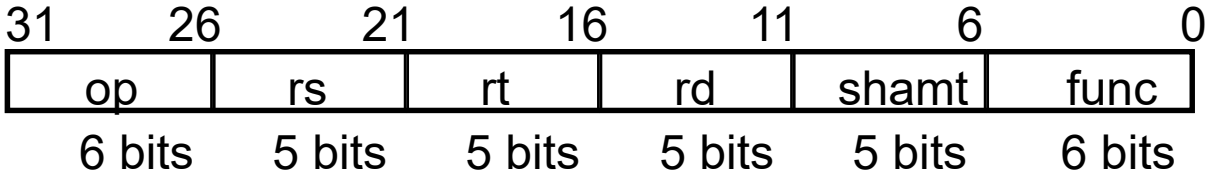

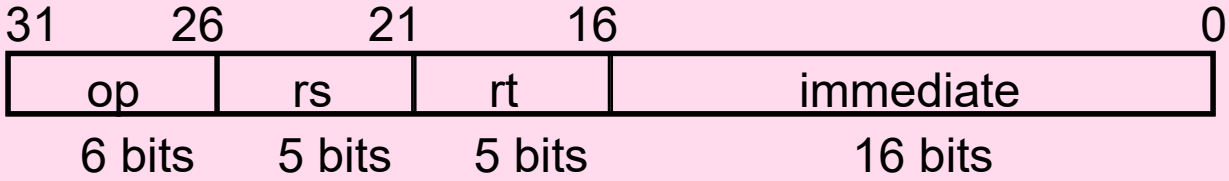

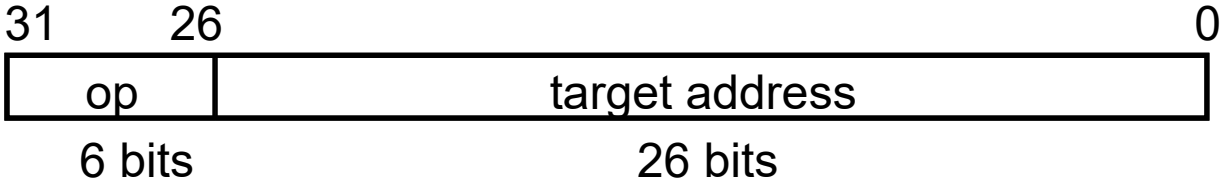

RTL: The Store Instruction

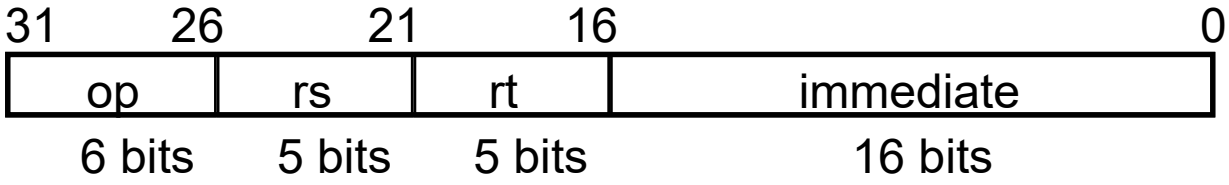

- sw rt, rs, imm16
  - M[PC]
  - Addr ← R[rs] + SignExt(imm16)
  - Mem[Addr] ← R[rt]
  - PC ← PC + 4

Datapath for SW

- M[R[rs] + SignExt[imm16]] ← R[rt] Example: sw rt, rs, imm16

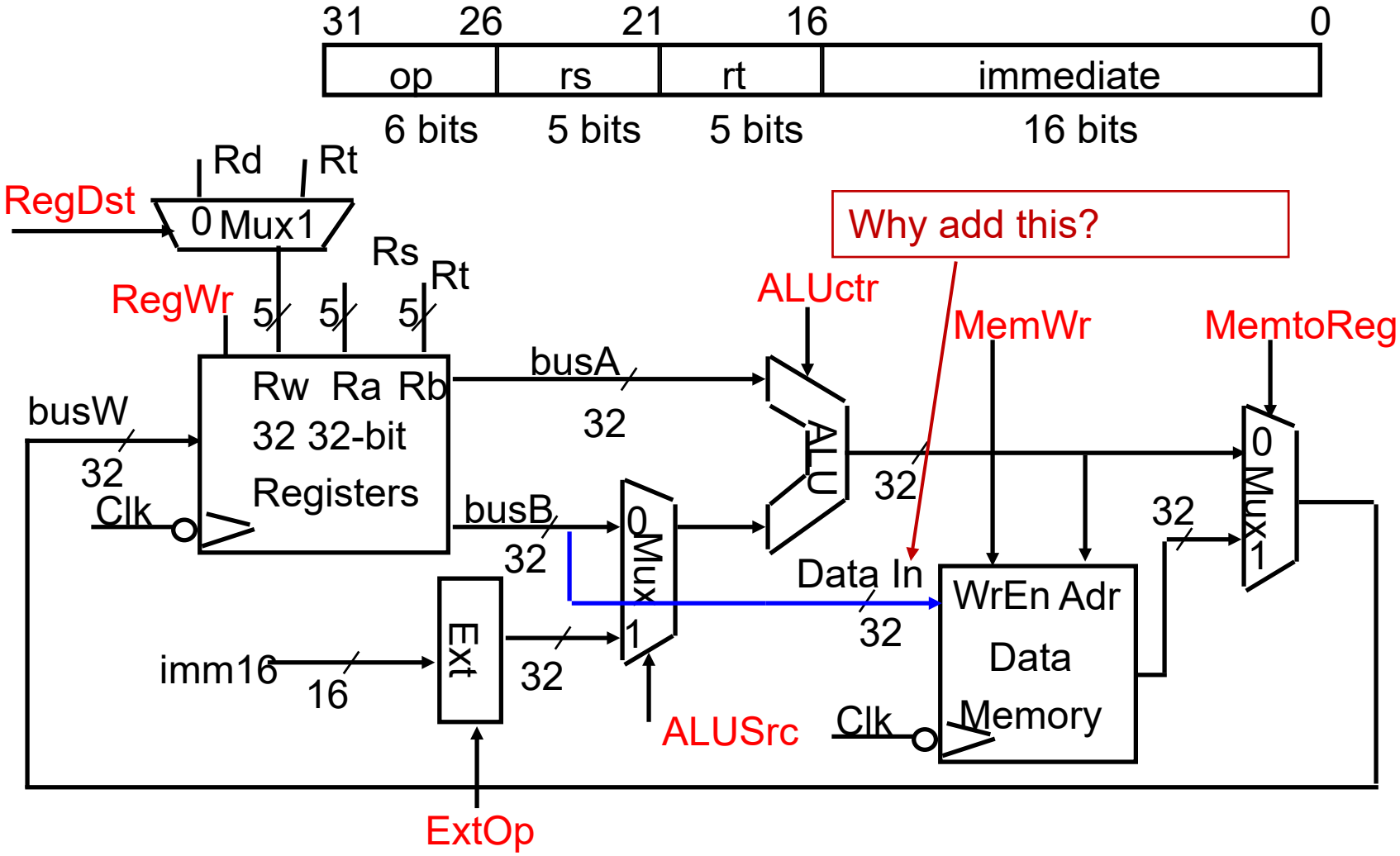

RegDst=x, **RegWr=0**, ALUctr=add, ExtOp=1, ALUSrc=1, MemWr=1, MemtoReg=x

Beq

- ADD and subtract
  - add rd, rs, rt
  - sub rd, rs, rt
- OR Immediate:
  - ori rt, rs, imm16
- LOAD and STORE
  - lw rt, rs, imm16
  - sw rt, rs, imm16
- BRANCH:
  - beq rs, rt, imm16
- JUMP:
  - j target

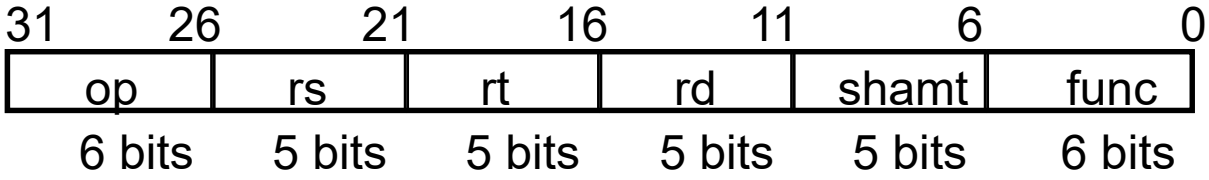

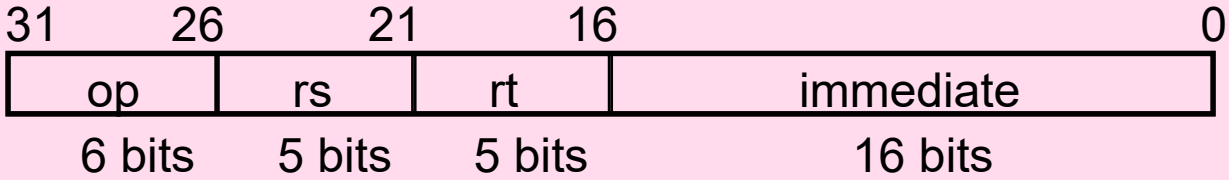

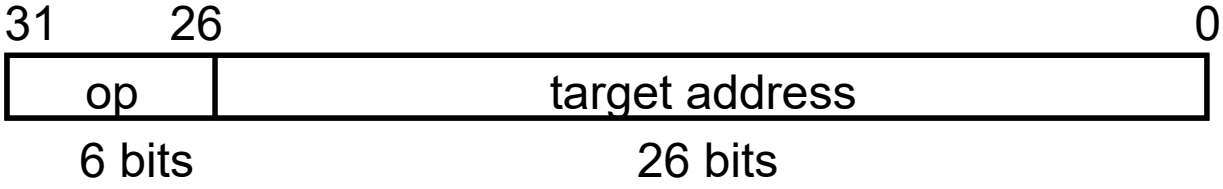

RTL: The Branch Instruction

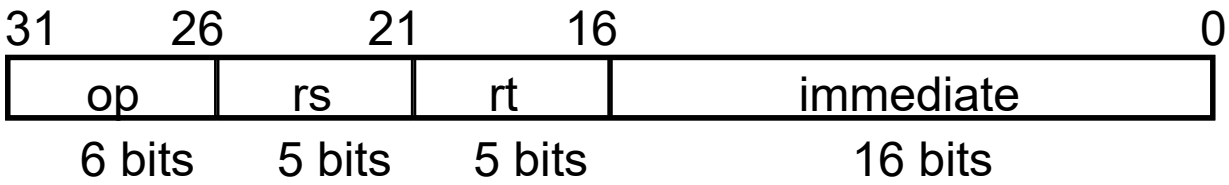

- beq rs, rt, imm16
  - M[PC]
  - Cond ← R[rs] - R[rt] Compare rs and rt
  - if (COND eq 0) Calculate the next instruction's address

    PC ← PC + 4 + (SignExt(imm16) x 4)

    else

    PC ← PC + 4

Datapath for beq

- beq rs, rt, imm16 We need to compare Rs and Rt !

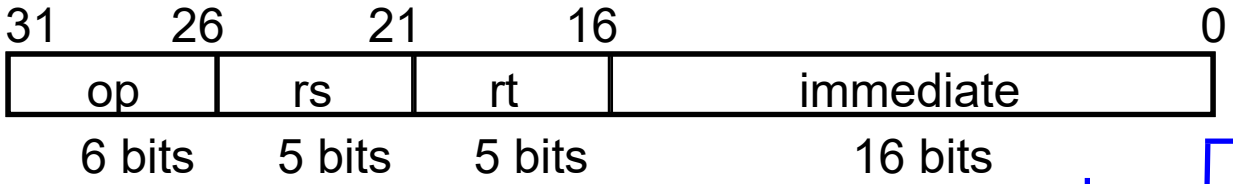

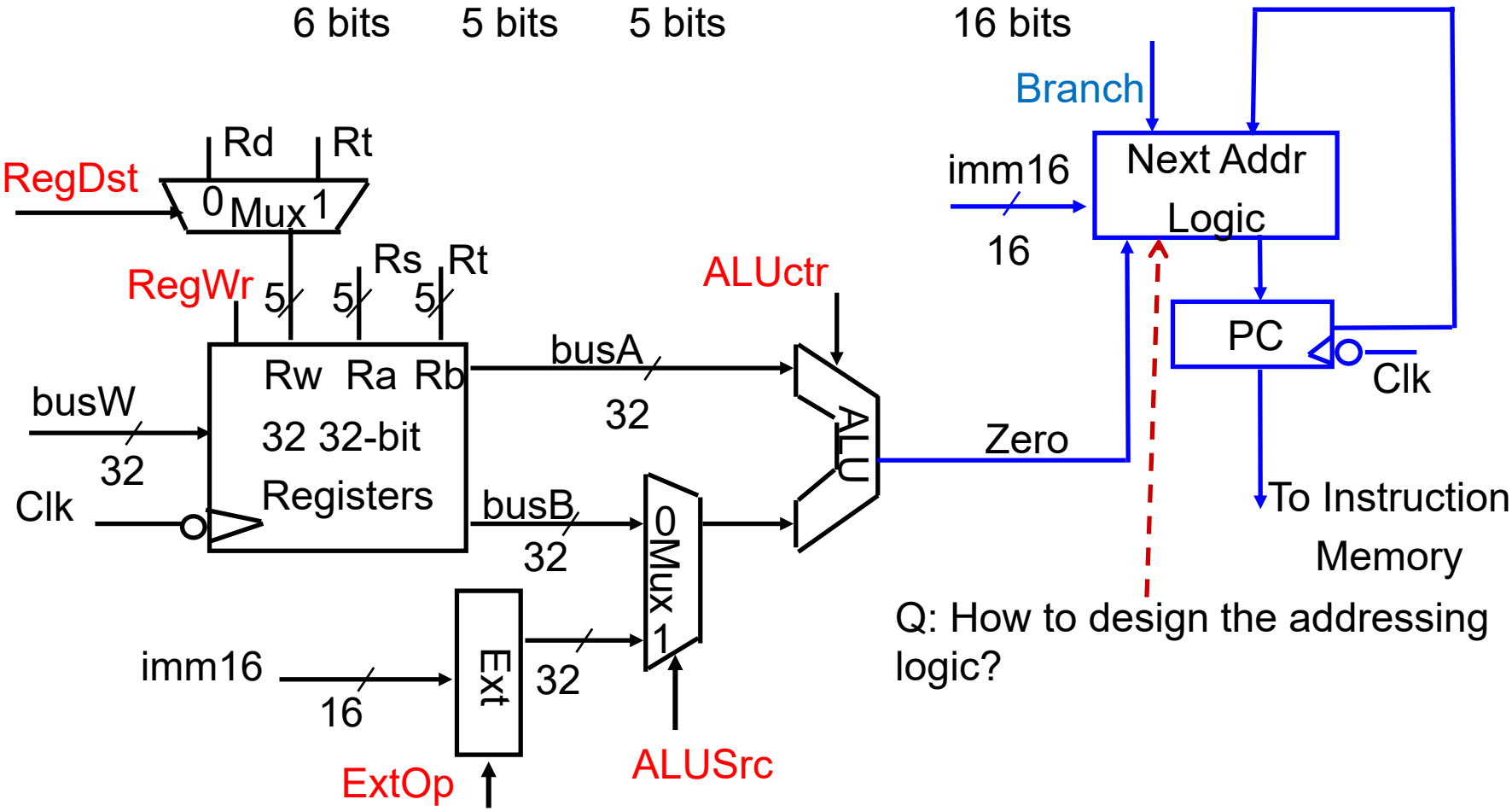

Q: How to design the addressing logic?

RegDst=x, **RegWr=0**, ALUctr=sub, ExtOp=x, ALUSrc=0, MemWr=0, MemtoReg=x, Branch=1

Instruction Fetch Unit at the End of Branch

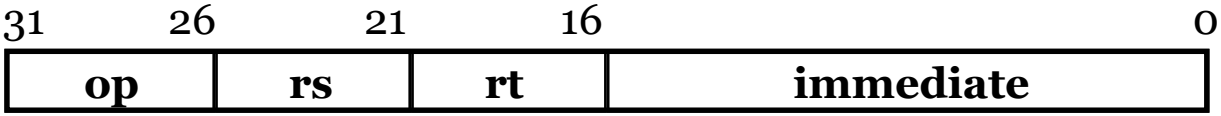

- if (Zero == 1) then PC = PC + 4 + SignExt[imm16]*4 ; else PC = PC + 4

Inst Memory
Adr
Instruction<31:0>
Branch
Zero
MUX ctrl
4
Adder
0
Mux
1
00
PC
Adder
imm16
PC Ext
clk
RegWr
5
5
5
Rs
Rt
ALUctr
busA
32
Rw Ra Rb
32 32-bit
Registers
busW
32
Clk
busB
32
ALU
Zero

Jump Operation

- ADD and subtract
  - add rd, rs, rt
  - sub rd, rs, rt
- OR Immediate:
  - ori rt, rs, imm16
- LOAD and STORE
  - lw rt, rs, imm16
  - sw rt, rs, imm16
- BRANCH:
  - beq rs, rt, imm16
- JUMP:
  - j target

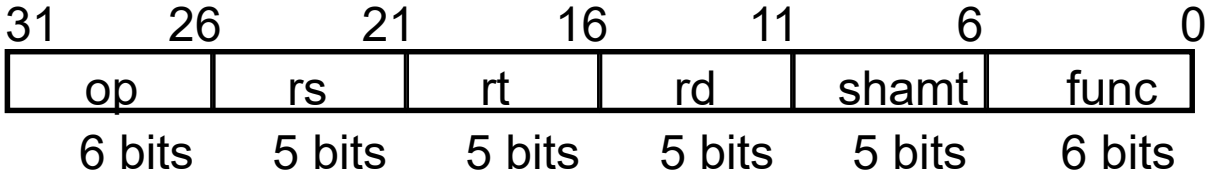

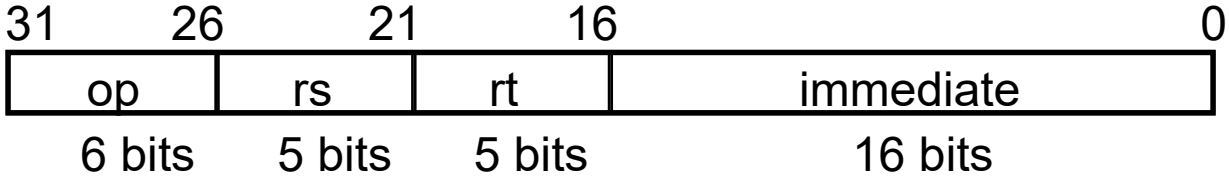

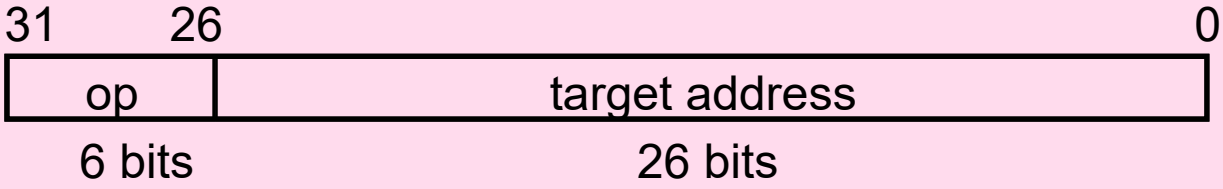

Executing Jump Operations

- Jump operation involves
  - replace the lower 28 bits of the PC with the lower 26 bits of the fetched instruction shifted left by 2 bits

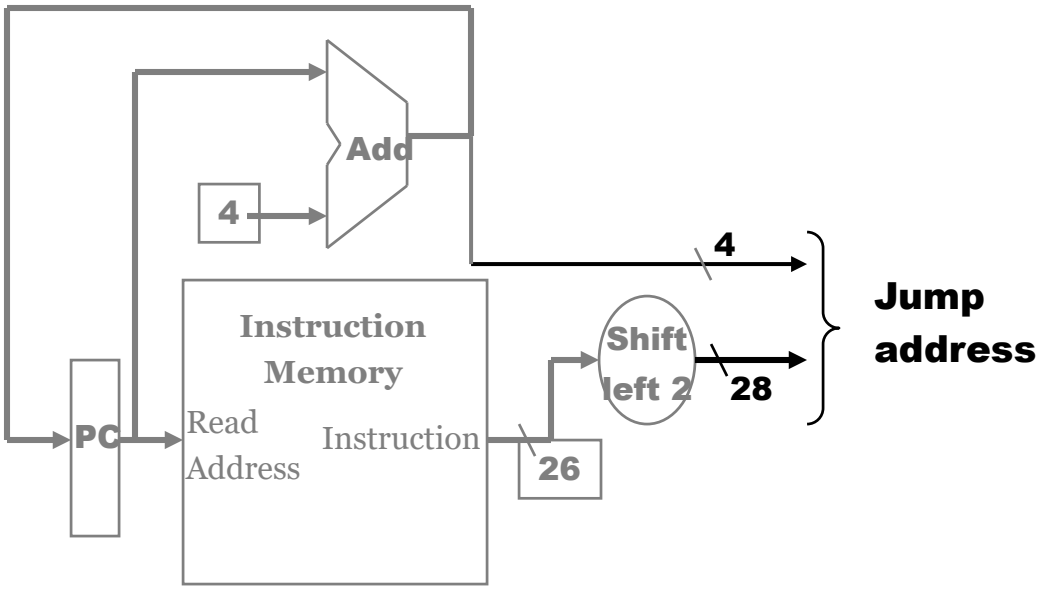

Single Cycle Datapath (Without Jump)

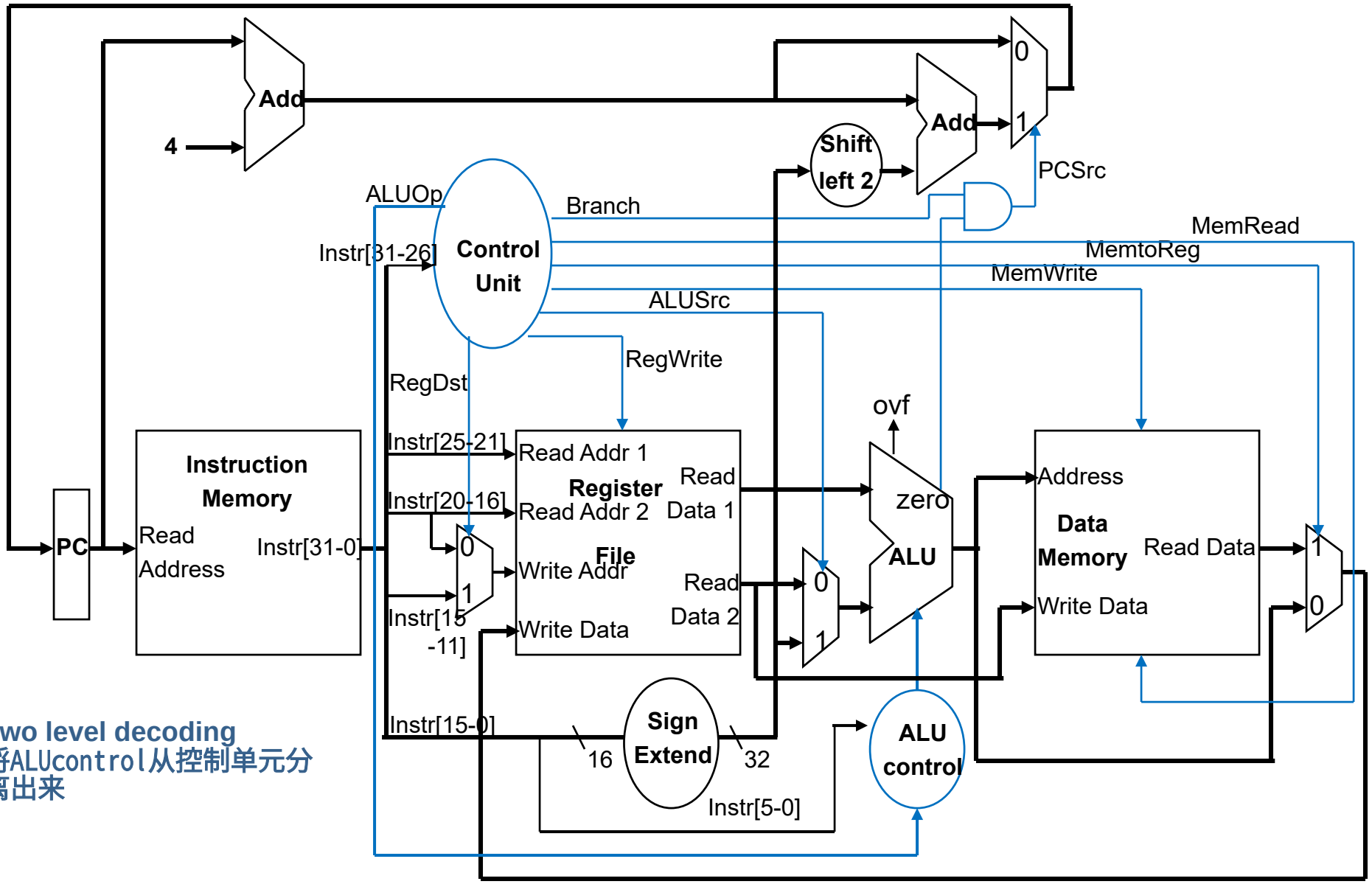

Two level decoding
将ALUcontrol从控制单元分离出来

Step 4: Adding the Control

- Selecting the operations to perform (ALU, Register File and Memory read/write)
- Controlling the flow of data (multiplexor inputs)

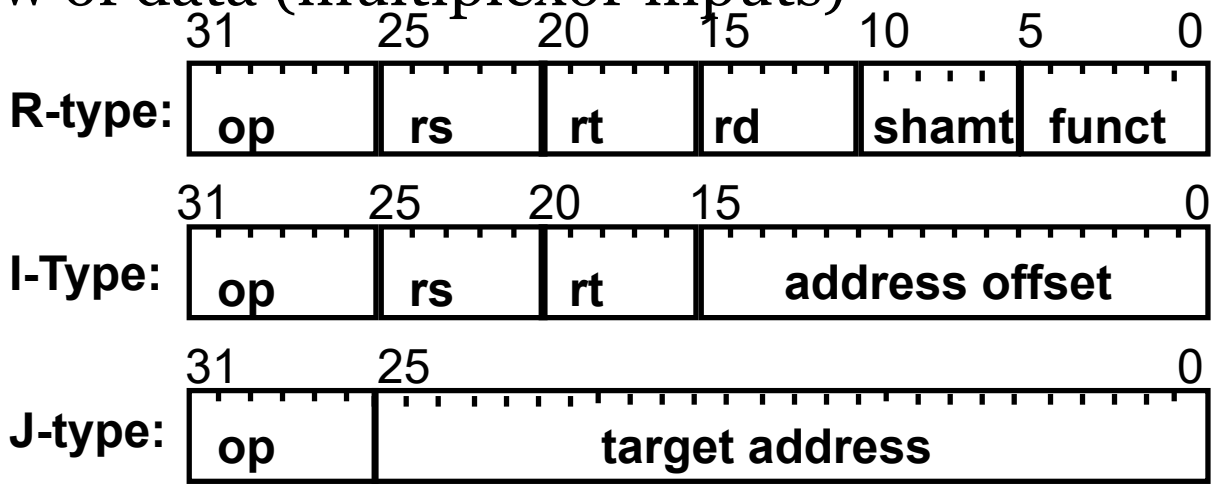

- **Observations**

  op field always in bits 31-26

  addr of registers to be read are always specified by the rs field (bits 25-21) and rt field (bits 20-16); for lw and sw rs is the base register

  addr. of register to be written is in one of two places – in rt (bits 20-16) for lw; in rd (bits 15-11) for R-type instructions

  offset for beq, lw, and sw always in bits 15-0

R-type Instruction Data/Control Flow

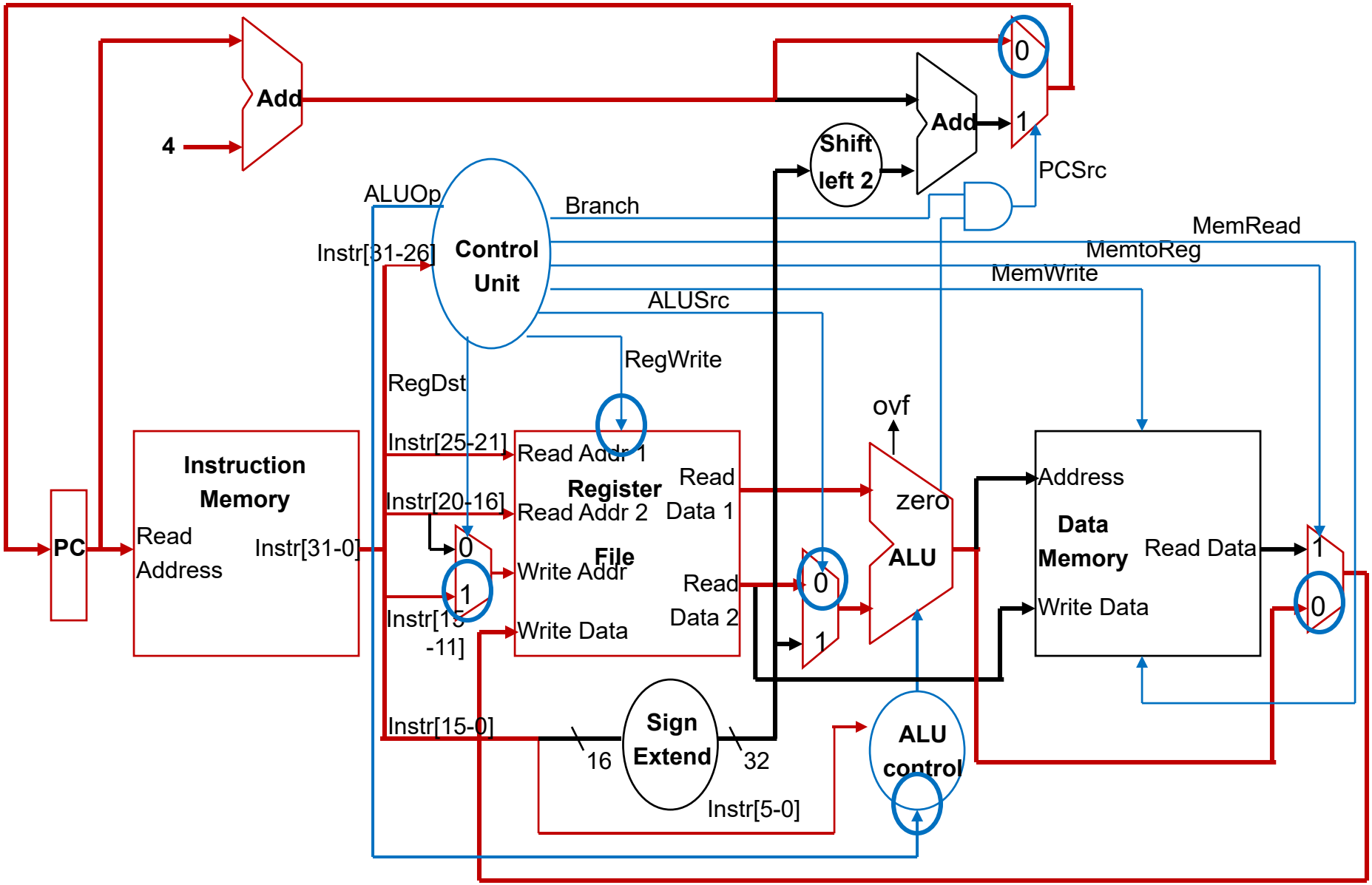

Load Word Instruction Data/Control Flow

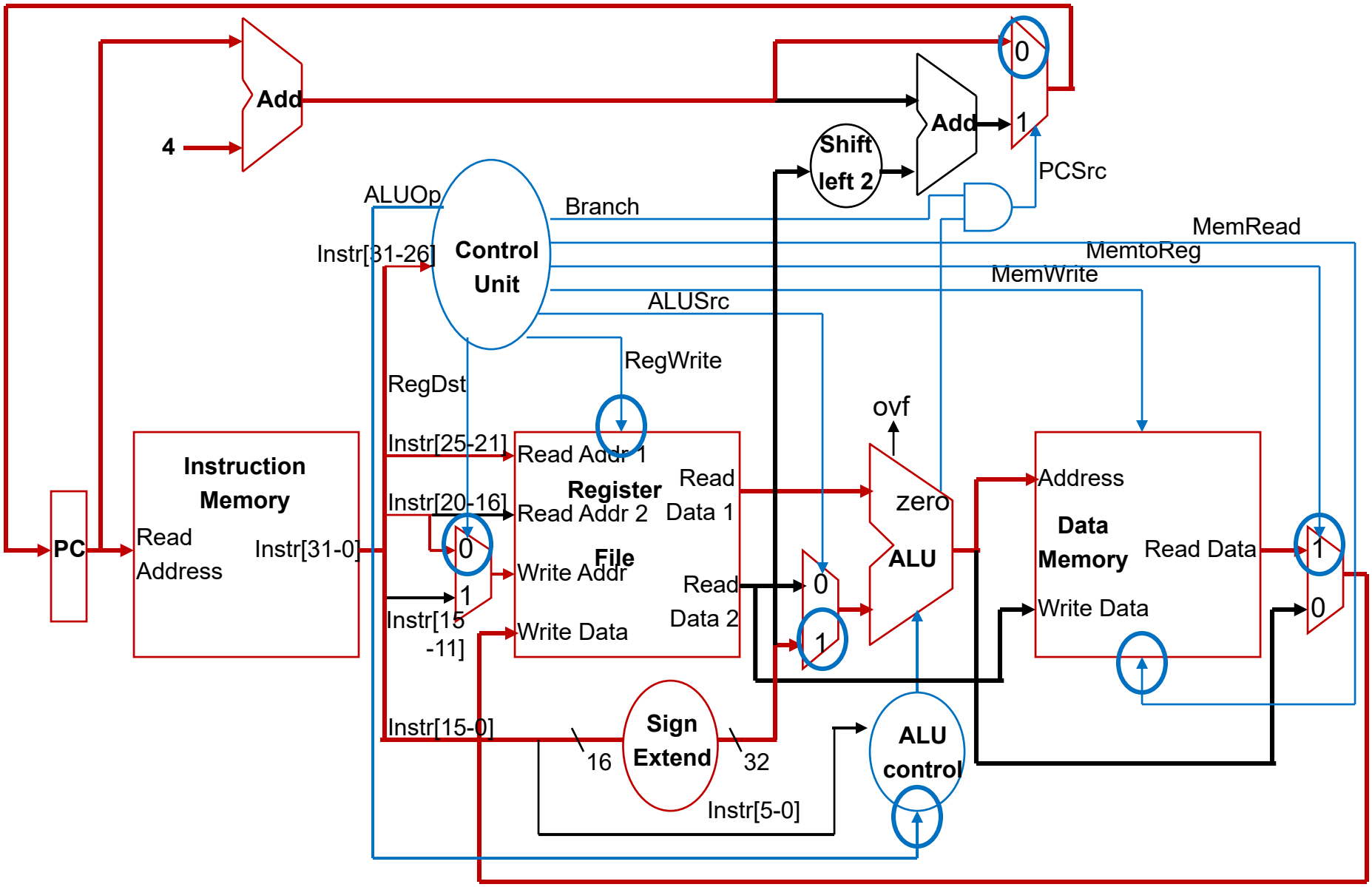

Branch Instruction Data/Control Flow

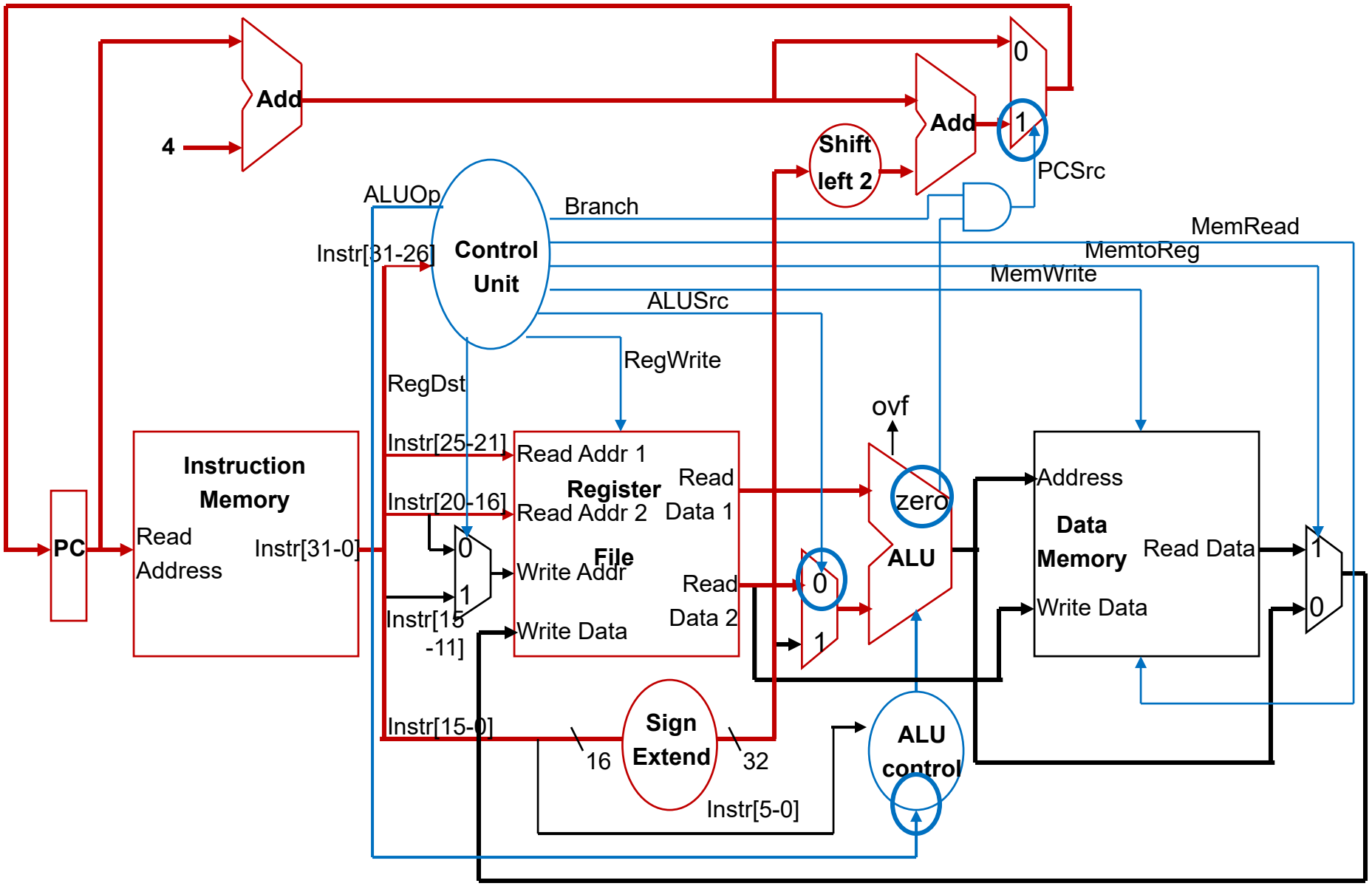

Adding the Jump Operation

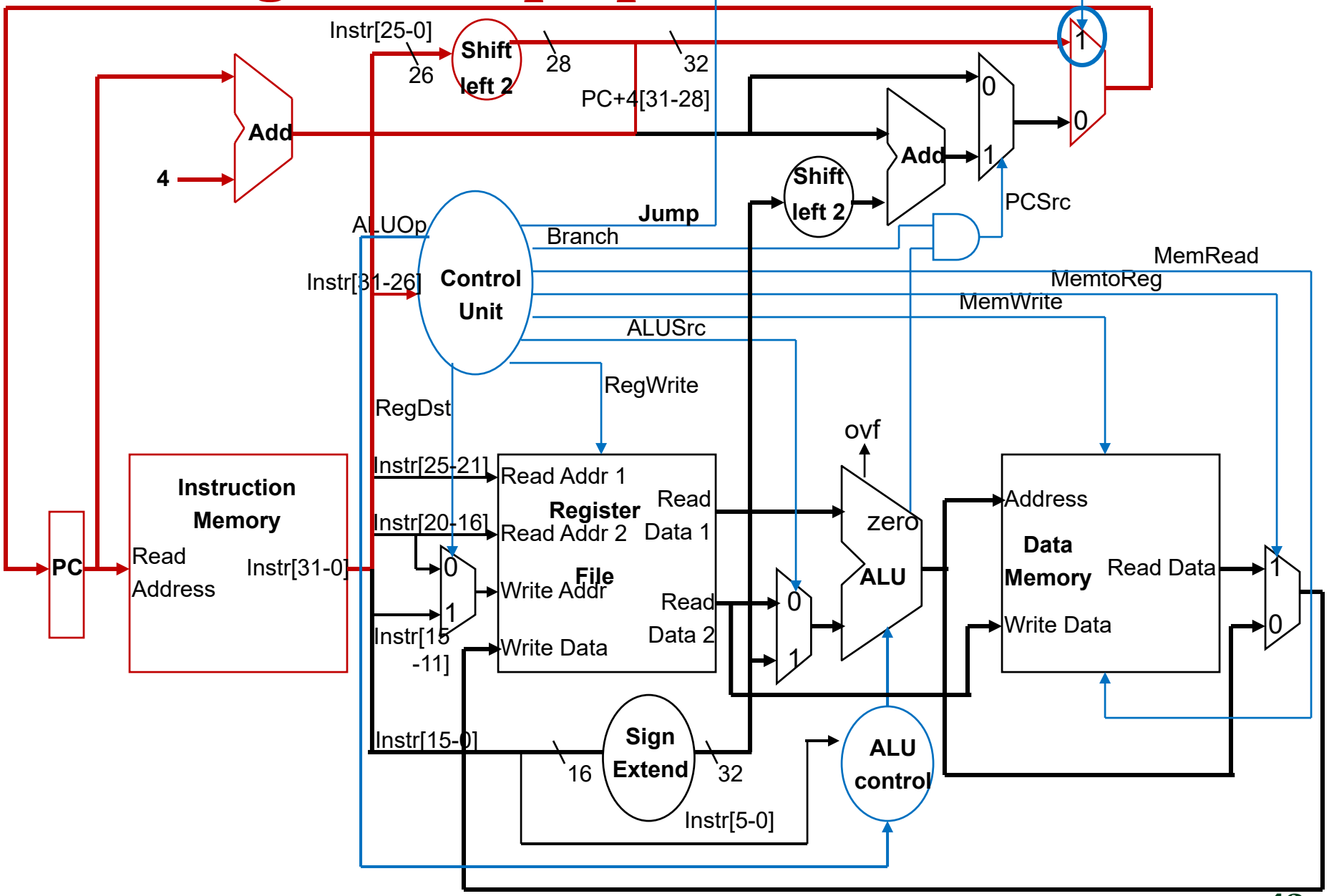

Assemble Control Logic

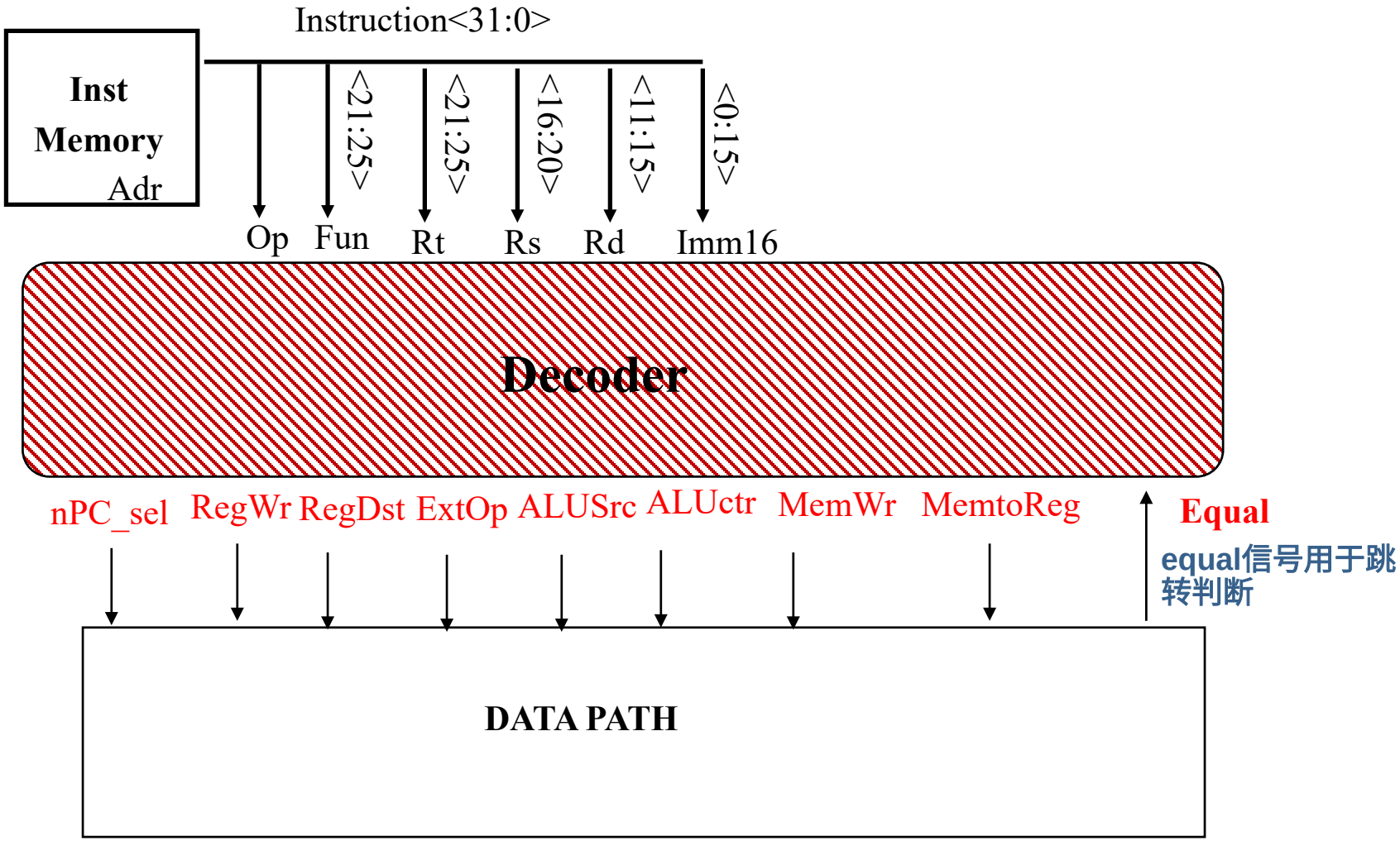

A Summary of the Control Signals

func	10 0000	10 0010	We Don't Care :-)				
op	00 0000	00 0000	00 1101	10 0011	10 1011	00 0100	00 0010
	add	sub	ori	lw	sw	beq	jump
RegDst	1	1	0	0	x	x	x
ALUSrc	0	0	1	1	1	0	x
MemtoReg	0	0	0	1	x	x	x
RegWrite	1	1	1	1	0	0	0
MemWrite	0	0	0	0	1	0	0
Branch	0	0	0	0	0	1	0
Jump	0	0	0	0	0	0	1
ExtOp	x	x	0	1	1	x	x
ALUctr<2:0>	Add	Subtr	Or	Add	Add	Subtr	xxx

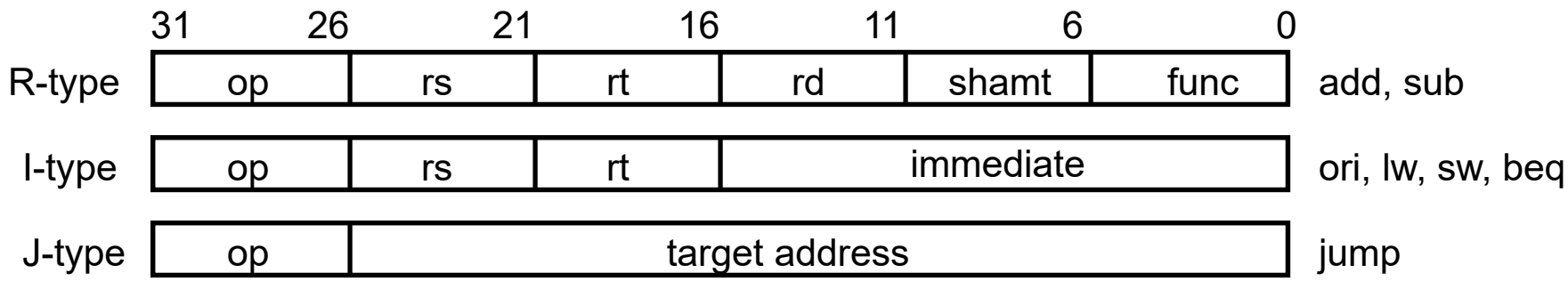

The Concept of Local Decoding

Two levels of decoding: Main Control and ALU Control

op	00 0000	00 1101	10 0011	10 1011	00 0100	00 0010
	R-type	ori	lw	sw	beq	jump
RegDst	1	0	0	x	x	x
ALUSrc	0	1	1	1	0	x
MemtoReg	0	0	1	x	x	x
RegWrite	1	1	1	0	0	0
MemWrite	0	0	0	1	0	0
Branch	0	0	0	0	1	0
Jump	0	0	0	0	0	1
ExtOp	x	0	1	1	x	x
ALUctr	Add/Subtr	Or	Add	Add	Subtr	xxx

从opcode可以知道这是一个r型指令，用function区判断操作

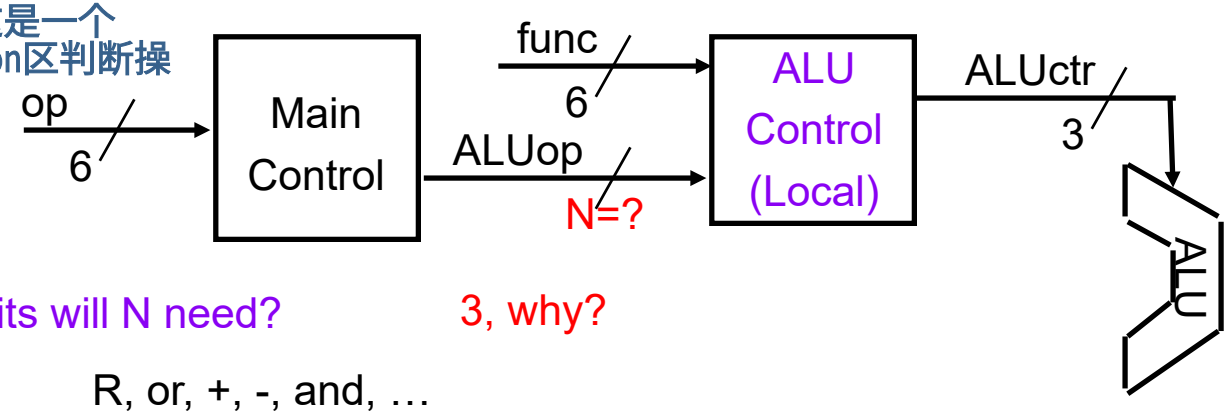

ALUctr is determined by ALUop and func, while other control signals are determined by op

How many bits will N need?

3, why?

R, or, +, -, and, …

The Decoding of the "func" Field

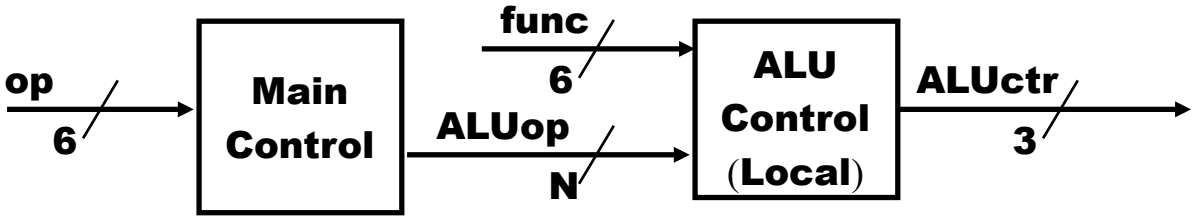

Encoding ALUop as follows

	R-type	ori	lw	sw	beq	jump
ALUop (Symbolic)	"R-type"	Or	Add	Add	Subtr	xxx
ALUop<2:0>	1 00	0 10	0 00	0 00	001	xxx

	31 – 26	21 – 16	16 – 11	11 – 6	6 – 0
R-type	000000	rs	rt	rd	shamt	func

func<5:0>	Instruction Operation
10 0000	add
10 0010	subtract
10 0100	and
10 0101	or
10 1010	set-on-less-than

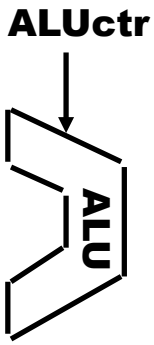

ALUctr<2:0>	ALU Operation
000	Add
001	Subtract
010	And
110	Or
001	Subtract

The Truth Table for ALUctr

R-type Instructions determined by funct

Non-R-type Instructions determined by ALUop

ALUop (Symbolic)	R-type	ori	lw	sw	beq
	"R-type"	Or	Add	Add	Subtr
ALUop<2:0>	1 00	0 10	0 00	0 00	001

funct<3:0>	Instruction Op.
0000	add
0010	subtract
0100	and
0101	or
1010	set-on-less-than

ALUop			func				ALU	ALUctr		
bit2	bit1	bit0	bit<3>	bit<2>	bit<1>	bit<0>	Operation	bit<2>	bit<1>	bit<0>
0	0	0	x	x	x	x	Add	0	0	0
0	x	1	x	x	x	x	Subtract	0	0	1
0	1	0	x	x	x	x	Or	1	1	0
1	x	x	0	0	0	0	Add	0	0	0
1	x	x	0	0	1	0	Subtract	0	0	1
1	x	x	0	1	0	0	And	0	1	0
1	x	x	0	1	0	1	Or	1	1	0
1	x	x	1	0	1	0	Subtract	0	0	1

The Logic Equation for ALUctr<0>

Choose the rows with ALUctr[0]=1

ALUop			func				
bit<2>	bit<1>	bit<0>	bit<3>	bit<2>	bit<1>	bit<0>	ALUctr<0>
0	x	1	x	x	x	x	1
1	x	x	0	0	1	0	1
1	x	x	1	0	1	0	1

This makes func<3> a don't care

- ALUctr<0> = !ALUop<2> & ALUop<0> +
  ALUop<2> & !func<2> & func<1> & !func<0>

The Logic Equation for ALUctr<1>

Choose the rows with ALUctr[1]=1

ALUop			func				
bit<2>	bit<1>	bit<0>	bit<3>	bit<2>	bit<1>	bit<0>	ALUctr<1>
0	1	0	x	x	x	x	1
1	x	x	0	1	0	0	1
1	x	x	0	1	0	1	1

- ALUctr<1> = !ALUop<2> & ALUop<1> & ! ALUop<0> +
  ALUop<2> & !func<3> & func<2> & !func<1>

The Logic Equation for ALUctr<2>

Choose the rows with ALUctr[2]=1

ALUop			func				
bit<2>	bit<1>	bit<0>	bit<3>	bit<2>	bit<1>	bit<0>	ALUctr<2>
0	1	0	x	x	x	x	1
1	x	x	0	1	0	1	1

- ALUctr<2> = !ALUop<2> & ALUop<1> & !ALUop<0>
  + ALUop<2> & !func<3> & func<2> & !func<1> & func<0>

析取表达式（用或连接）

Summary of Control Logic of Local Control

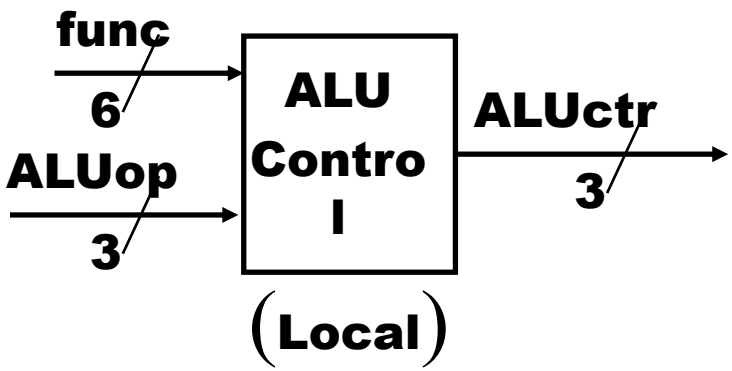

- ALUctr<0> = !ALUop<2> & ALUop<0> +
  ALUop<2> & !func<2> & func<1> & !func<0>
- ALUctr<1> = !ALUop<2> & ALUop<1> & !ALUop<0> +
  ALUop<2> & !func<3> & func<2> & !func<1>
- ALUctr<2> = !ALUop<2> & ALUop<1> & !ALUop<0> +
  ALUop<2> & !func<3> & func<2> & !func<1> & func<0>

The "Truth Table" for the Main Control

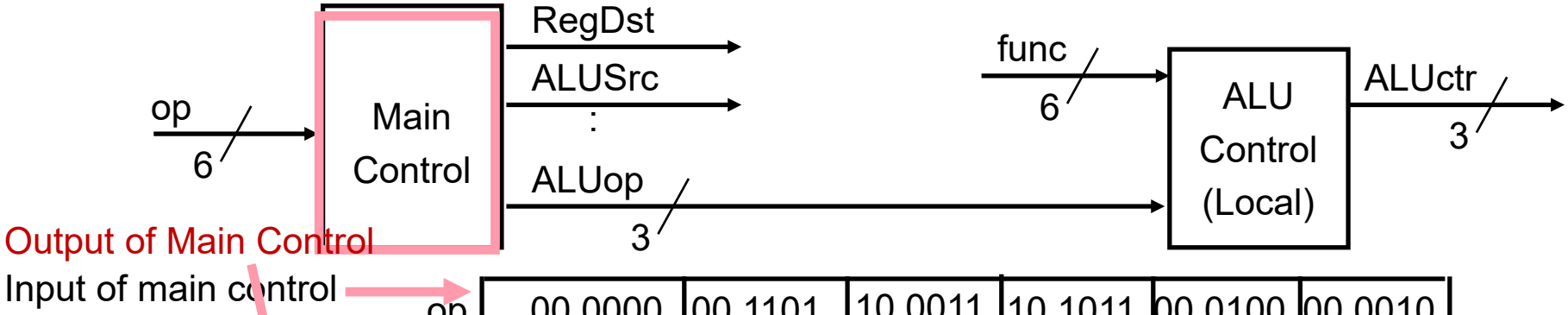

op	00 0000	00 1101	10 0011	10 1011	00 0100	00 0010
	R-type	ori	lw	sw	beq	jump
RegDst	1	0	0	x	x	x
ALUSrc	0	1	1	1	0	x
MemtoReg	0	0	1	x	x	x
RegWrite	1	1	1	0	0	0
MemWrite	0	0	0	1	0	0
Branch	0	0	0	0	1	0
Jump	0	0	0	0	0	1
ExtOp	x	0	1	1	x	x
ALUop (Symbolic)	"R-type"	Or	Add	Add	Subtr	xxx
ALUop <2>	1	0	0	0	0	x
ALUop <1>	x	1	0	0	x	x
ALUop <0>	x	0	0	0	1	x

The "Truth Table" for RegWrite

op	00 0000	00 1101	10 0011	10 1011	00 0100	00 0010
	R-type	ori	lw	sw	beq	jump
RegWrite	1	1	1	0	0	0

- RegWrite = R-type + ori + lw

  = !op<5> & !op<4> & !op<3> & !op<2> & !op<1> & !op<0> (R-type)

  + !op<5> & !op<4> & op<3> & op<2> & !op<1> & op<0>(ori)

  + op<5> & !op<4> & !op<3> & !op<2> & op<1> & op<0>(lw)

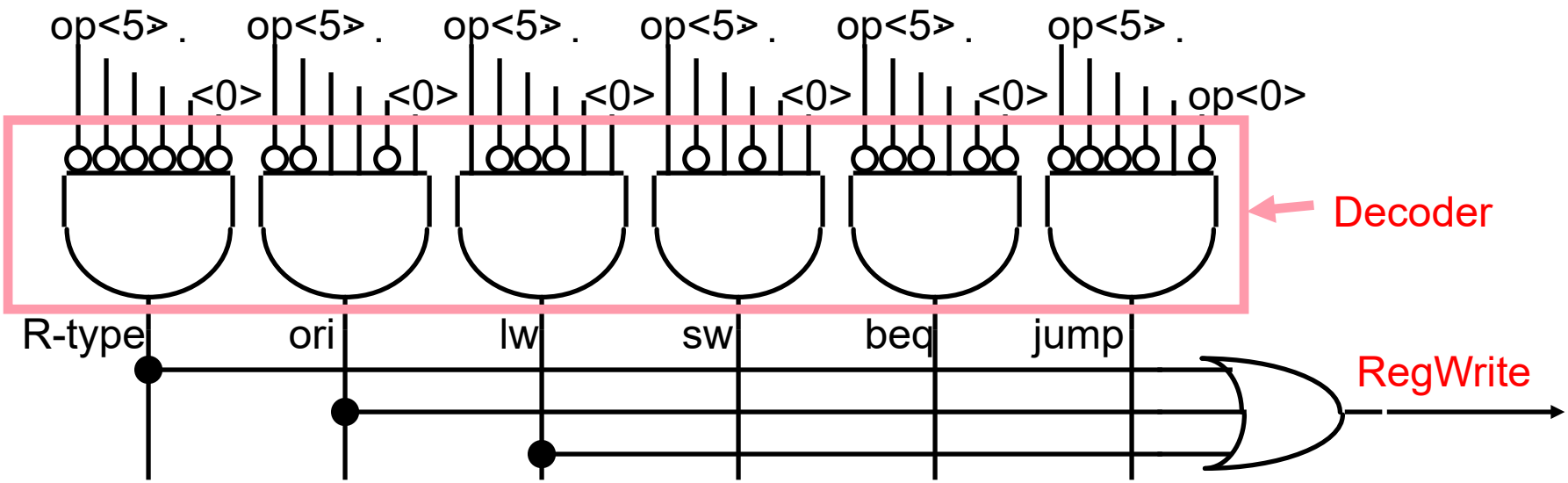

Assemble Main Control (PLA)

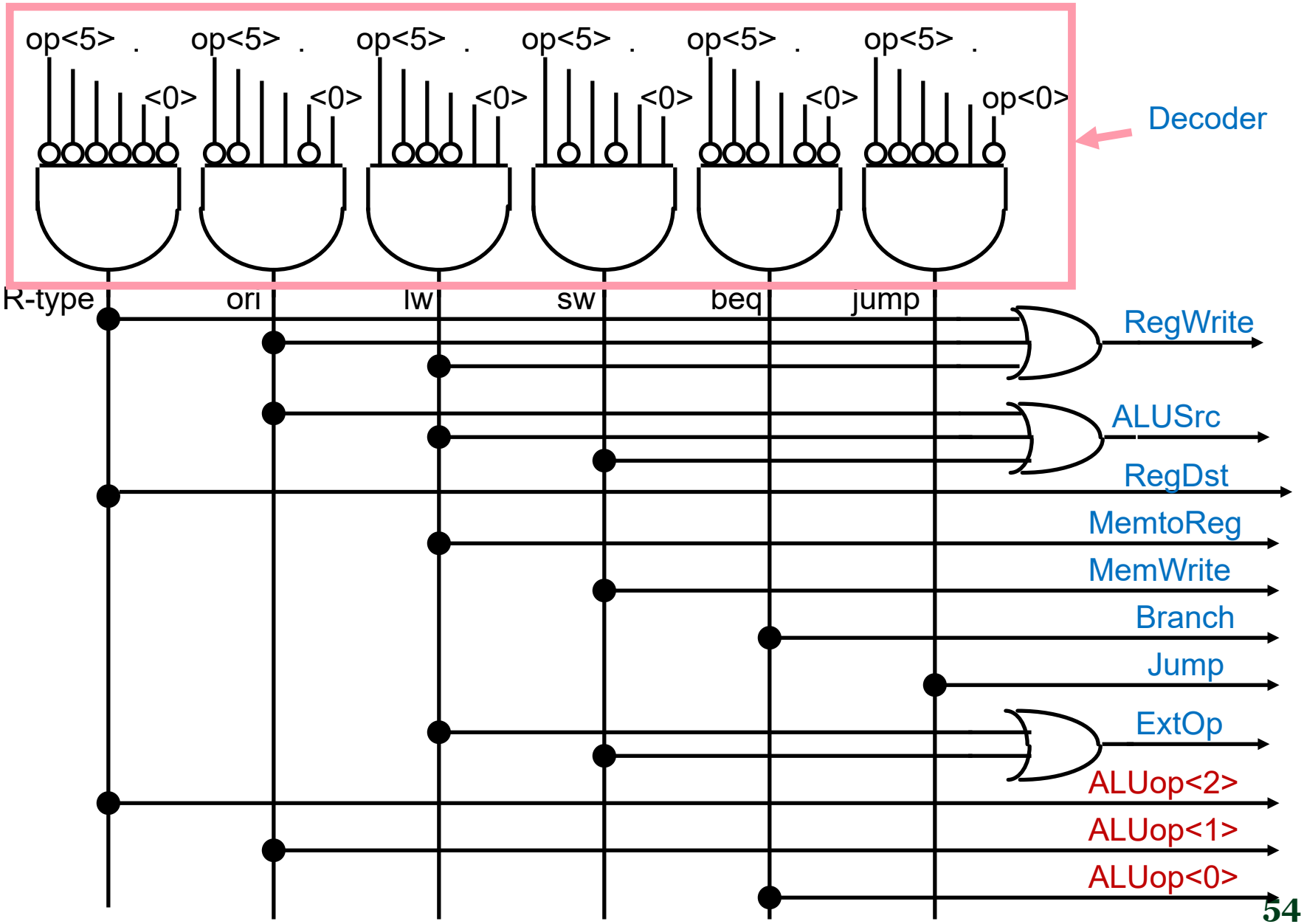
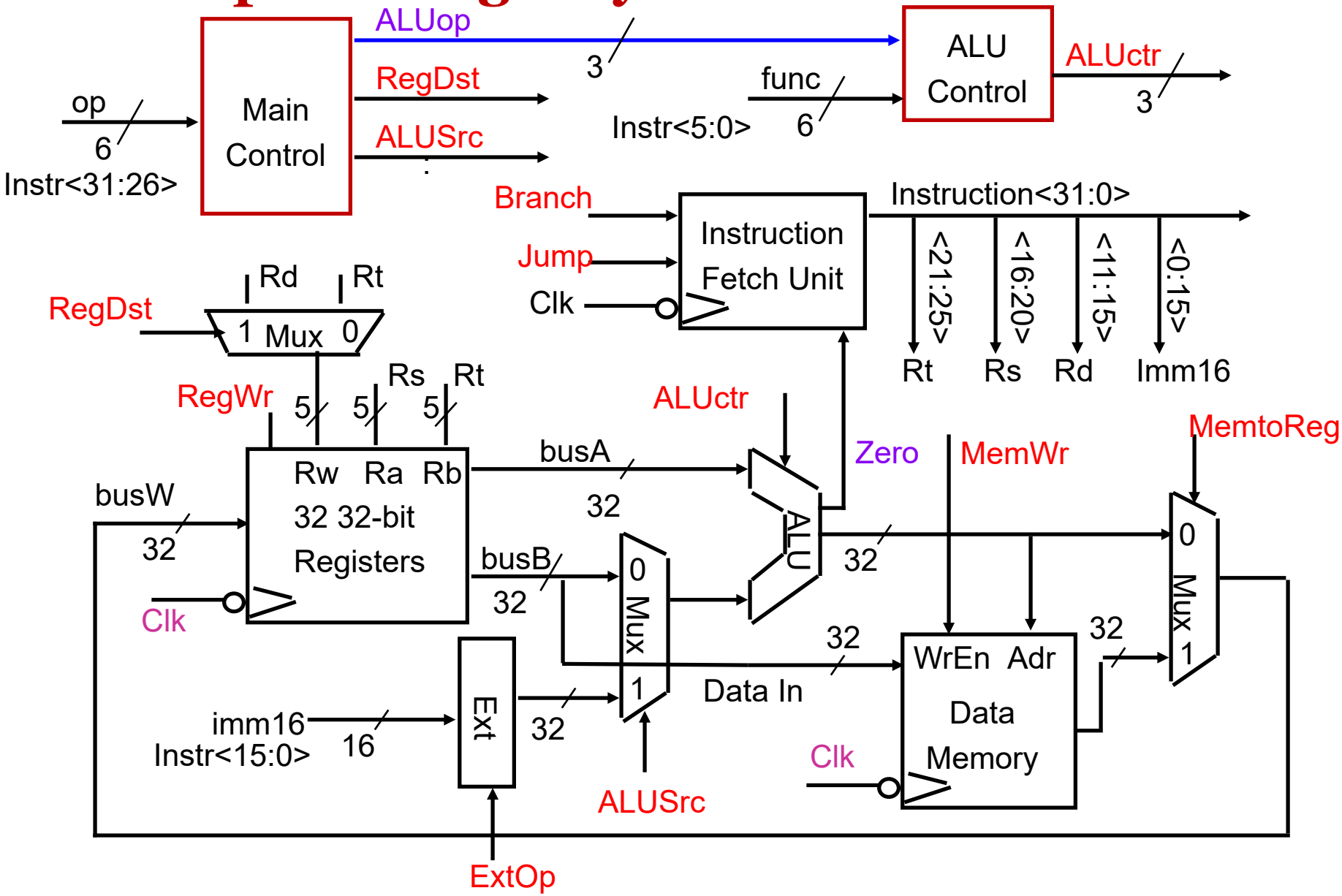
The Complete Single Cycle Data Path with Control